Pressure Reducing Control Valve

FDV-R-PN2

The FDV-R-PN2 Pressure reducing valve is an automatic hydraulic control valve, designed to operate in fixed fire protection system ad in peripheral FP water supply systems.

The FDV-R-PN2 pilot controlled hydraulic valve is activated by line pressure. The pilot valve has a spring-loaded membrane which is sensitive to the downstream pressure. The pilot's spring is pre-set to a desired reduced pressure. Accordingly, it maintains a constant downstream pressure by gradually opening or closing of the main valve, reducing the inlet water pressure to a pre-set desired outlet pressure. As a result, the outlet pressure is maintained constant, regardless of fluctuations in flow rate and changes in main pipeline pressure.

Designed for vertical, horizontal and angled installation, the line pressure operated FDV-R-PN2 Pressure reducing valve features a direct elastomeric diaphragm seal, with no balancing spring or internal metallic wet components in the valve body. In addition, the hydrodynamic pattern design ensures high flow rates with minimum head loss.



MARKETS

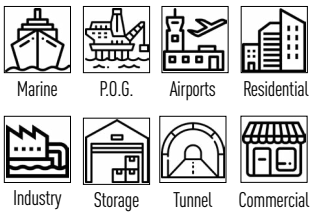

TECHNICAL DATA

FLUID: Water, Brackish water, Sea water, Foam

SIZE RANGE:
FDV-R valve (globe) -
40 mm to 400 mm (1½" to 16")
FDV-Ra valve (angled) –
50 mm to 200 mm (2" to 8")

CONNECTIONS ENDS:
Flange*Flange,
Groove*Groove,
Thread*Thread
PRESSURE NOMINAL:
UL - 250 psi (17.2 bar)
FM - 300 psi)20.7 bar)

REGULATION RATIO: 2.5:1

SENSITIVITY: 1.45 psi (0.1 Bar)

ADVANTAGES

- Only three parts: body, diaphragm & cover plate, no wet metal spring inside the control chamber.
- Low maintenance cost: the valve is serviced in-line and only one replaceable part - the long-life elastomeric diaphragm.
- Conforms with inspection, Testing and Maintenance Standard of water-based Fire Protection Systems, NFPA 25.
- Reduces inlet pressure to a predetermined fixed and constant outlet pressure, regardless of fluctuations or changes in main pipeline pressure and flow rate.

CHARACTERISTICS

- Hydro-dynamic pattern design ensures high flowrates with minimum head loss.
- Simple and reliable design.
- Quick respond to downstream pressure changes.
- Pressure reducing to a predetermined set of outlet pressure.

APPROVALS

Schematic drawing:

FDV-R-PN2

Set position

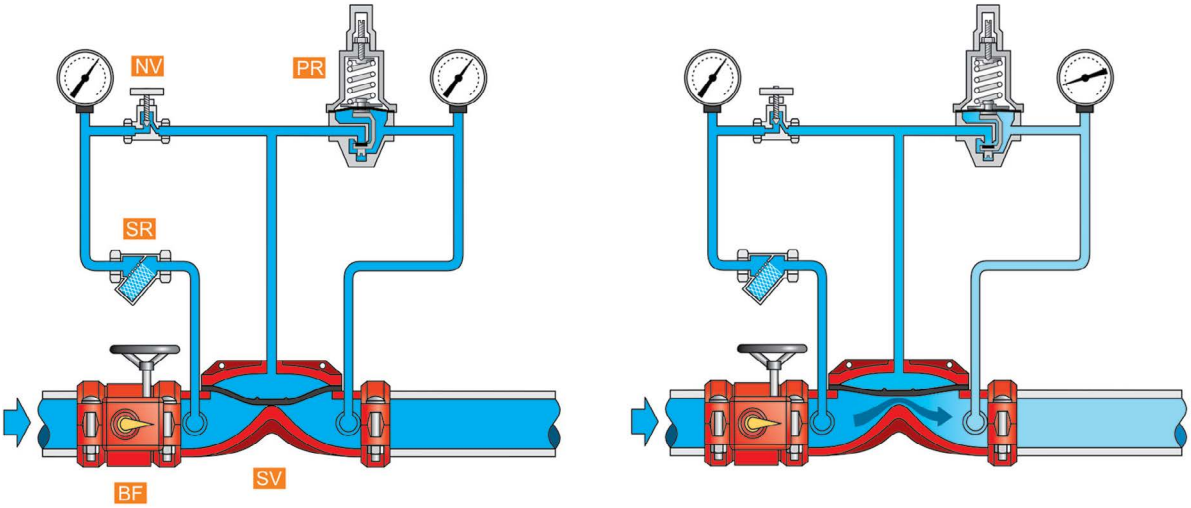

PR - PRPV – Pressure Reducing Pilot Valve
NV - Needle valve
SR - strainer
SV - FDV-R service valve
BF - Butterfly valve

SET POSITION

When the fire protection system is in the SET position, there is no flow through the system piping, and the water pressure equals the FDV-R-PN2 Pilot's set pressure. The FDV-R-PN2 valve's control chamber is pressurized by the inlet flow. Since there is no drainage from the control chamber through the Pressure Reducing Pilot Valve PRPV (PR), the pressure forces the diaphragm firmly against its seat, keeping the valve closed.

OPERATION

The FDV-R's control chamber is pressurized by a calibrated inlet flow passing through a Needle Valve (NV) and depressurized by the PRPV Pressure Reducing Pilot Valve (PR). The pilot's drain flow rate is governed by the downstream pressure, which acts through a sensing line to manipulate the pilot's diaphragm and sealing mechanism. Any variation in downstream pressure alters the balance between the control chamber's inlet and outlet flow rates. Consequently, the FDV-R valve's diaphragm position adjusts automatically to maintain the downstream pressure at the pilot's set point.

Typical installation

FDV-R- PN2

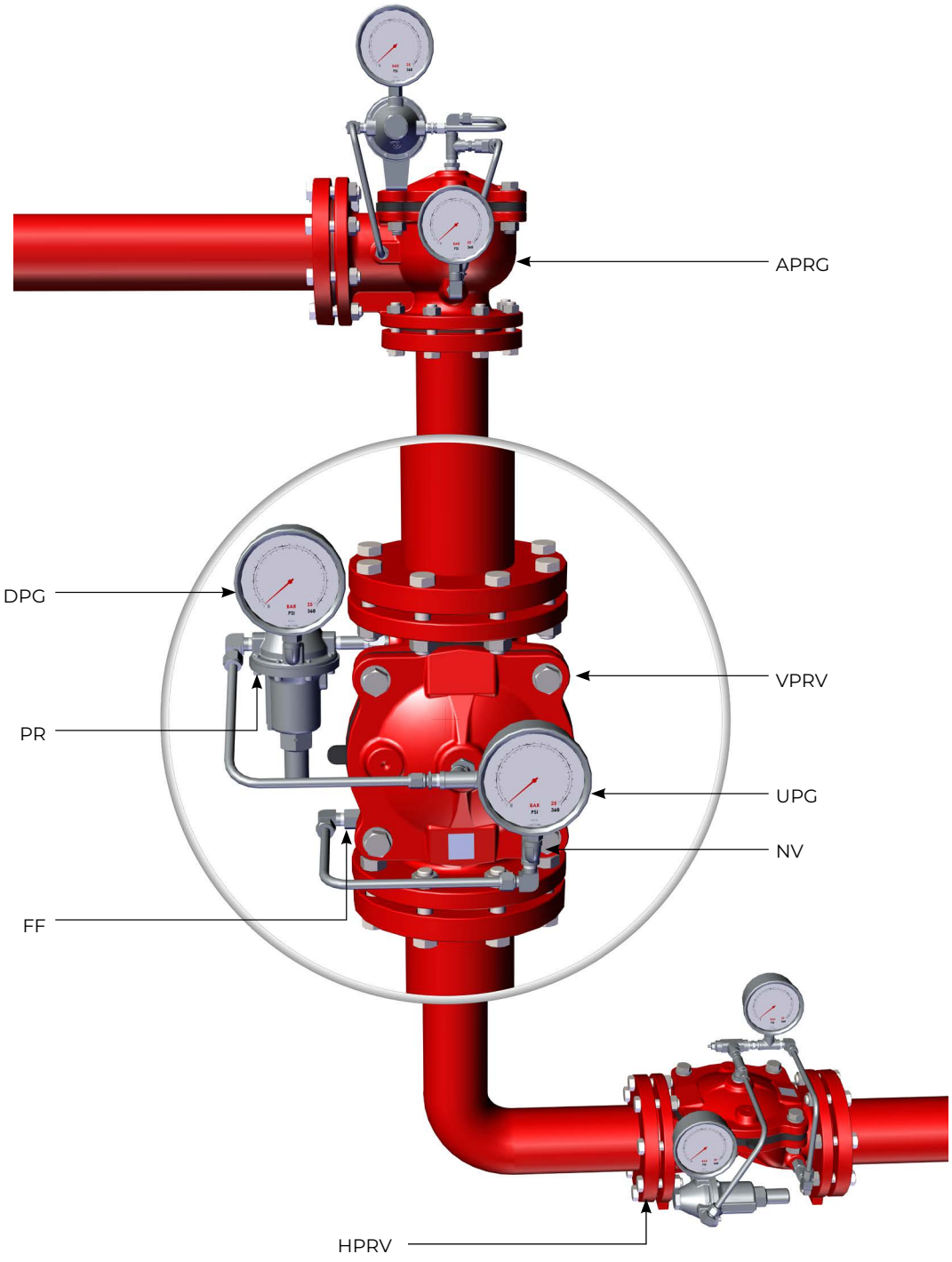

DPG – Downstream Pressure Gauge
PR – PRPV – Pressure Regulation Pilot Valve
FF – Finger Filter
NV – Needle Valve
UPG – Upstream Pressure Gauge
VPRV – Vertical Installation
APRV – Angled Installation
HPRV – Horizontal Installation

Parametric drawing:

FDV-R-PN2

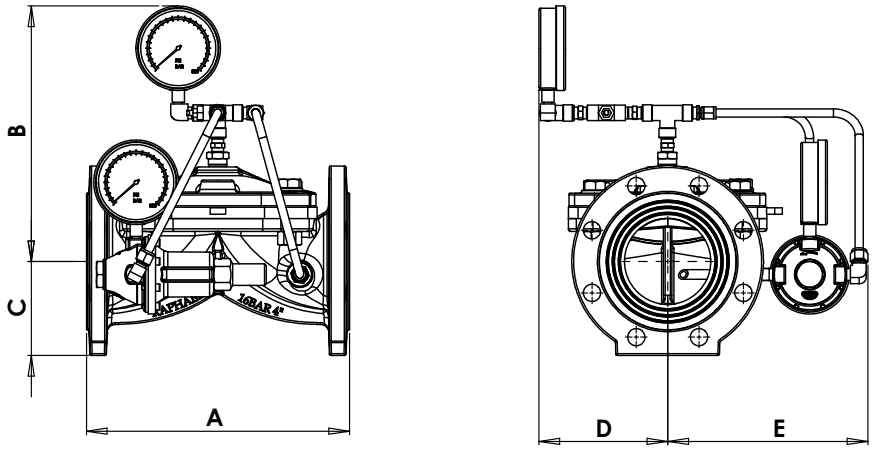

Dimensions Table

Size	2"		3"		4"		6"		8"		10"		12"	
	mm	inch	mm	inch	mm	inch	mm	inch	mm	Inch	mm	inch	mm	inch
A	190	7.5	283	11.1	305	12	406	16	470	18.5	635	25	749	29.5
B	220	8.6	233	9.2	298	11.7	316	12.4	384	15.1	426	16.7	328	12.9
C	82	3.2	100	3.9	108	4.2	142	5.6	160	6.3	197	7.7	234	9.2
D	117	4.6	119	4.7	150	5.9	150	5.9	177	6.7	233	9.2	240	9.4
E	179	7	212	8.3	232	9.1	281	11	277	10.9	233	9.2	282	11.1
Kg/lb	10	22	19	42	26	57	50	110	57	126	109	240	141	310

Factory Standard

MAIN VALVE

BODY & COVER

- Ductile iron
- Cast Steel WCB
- Stainless Steel CF8
- Stainless Steel CF8M
- Nickel Aluminum Bronze

ELASTOMERS:

- NR, fabric reinforced Natural Rubber
- EPDM, fabric reinforced
- NBR, fabric reinforced Nitrile Rubber

COATING:

- Base layer – high built Epoxy FBE
  Top layer – electrostatic Polyester powder RAL 3000
- Rilsan Polyamide based (Nylon 11)
- Internal – vitreous Enamel
  External – Epoxy/Polyester powder RAL 3000

TRIM

PIPING & TUBING:

- Stainless Steel 316
- Copper/Brass
- Cupro-Nickel
- Monel®

FITTINGS:

- Stainless Steel 316
- Brass
- Super Duplex
- Cupro-Nickel
- Monel®

ACCESSORIES:

- Stainless steel CF8M / 316
- Brass
- Nickel Aluminum Bronze
- SMO-245
- Monel®

PLEASE SPECIFY

- Valve ends
- Instalattion oriantation
- Working Media
- Ambiental conditions
- Min/Max operating flow
- Min/Max operating pressure
- Downstream set pressure
- Trim material
- Upstream set pressure
- Additional accessories needed:
- Direct acting Relief Valve

For more detailed technical information, please refer to chapter Engineering Data.