FDV-R-3W-MH1

[Comments]

Installation Operation & Maintenance manual

Fire Protection

RAPHAEL VALVES INDUSTRIES

RAPHAEL FP

FDV-R-3W-MH1

3-Way hydraulically operated monitor valve

DESCRIPTION

The FDV-R-3W-MH1 is a hydraulically controlled on-off fire protection monitor valve, designed to control the opening and closing of fire monitors. The FDV-R-3W-MH1 monitor valve can be installed in either a horizontal or vertical position and is commanded to open or close by a pressure reduction caused by an open sprinkler on the wet pilot line. This pressure reduction changes the state of the hydraulic actuator and consequently opens the main valve.
The three-way actuator enables quick operation and ensures full valve opening with a maximum flow rate.

The FDV-R-3W-MH1 is a globe-pattern, line-pressure-operated valve featuring a direct elastomeric diaphragm seal, with no balancing spring or internal metallic wetted components within the valve body. The hydrodynamic design ensures high flow rates with minimal head loss.

RAPHAEL FP

PARTS LIST

1. FDV-R type valve
2. MADV manual automatic drain valve
3. HAV-3 hydraulic actuator
4. Check Valve
5. Emergence Valve (2 way)
6. Orifice
7. Trim Pressure Supply Valve

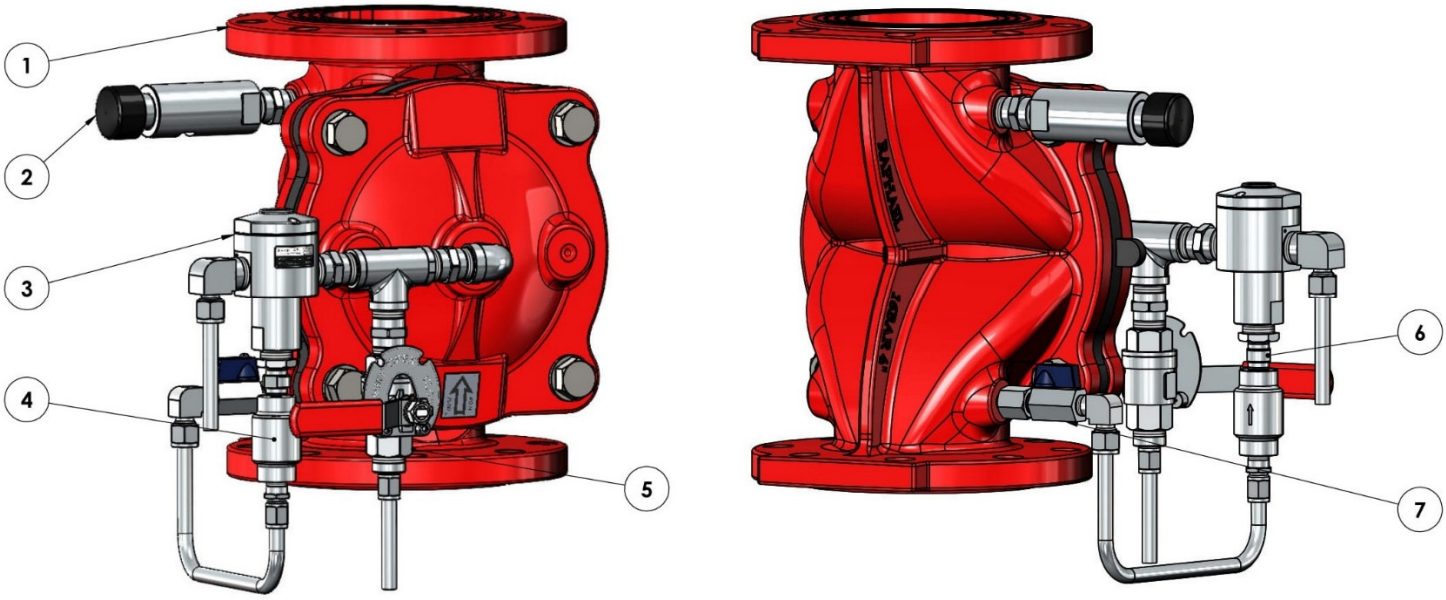

OPERATION (Reference Figure 1)

SET position:

Upstream pressure flows through the trim supply valve (7) and the check valve (4), passes through the open HAV-3 hydraulic actuator (3), and pressurizes the FDV-R (1) control chamber, thereby maintaining the valve in the closed position.
The actuator is connected to a wet pilot line, which in turn pressurizes the actuator's control chamber. Consequently, the actuator remains open, keeping the FDV-R valve closed.
The control chamber pressure in the main valve (1) is trapped by the check valve and by the closed emergency valve.

FIRE condition:

When the wet pilot line is exposed to heat, one or more of its sprinklers open, causing the actuator to change state and drain the FDV-R control chamber. When the control chamber is depressurized, the FDV-R valve opens and allows water to flow to the monitor.

RESET position:

To close the valve, all opened sprinklers must be replaced to enable re-pressurization of the wet pilot line. This changes the state of the HAV-3 actuator's control chamber, causing it to open. When opened, upstream pressure is directed to the FDV-R control chamber, and the valve closes.

RAPHAEL FP

INSTALLATION (Reference Figure 2)

1. This system is supplied pre-assembled and factory pre-adjusted. Any change carried out at the system's trim components order, pipes and tubes length or ports for axillary connection sizes, will affect the system operation and therefore, prohibited.

2. The system cannot be installed at a location where it might be subjected to freezing temperatures.

3. maintaining sufficient room around the system location ensures operational safety, and ease of maintenance.

4. It should be considered that water will be drained during regular maintenance on a routine basis, during periodical tests procedures and when operating in a fire situation. Therefore, a drainage plan should be considered.

5. The system described can be mounted vertically or vertically. Even though, systems with identical operation but for horizontal installation are marked with a prefix "H", e.g. HFDV-R-3W-MH1.

6. The FDV valve should be installed with the flow arrow marked on the valve's body, in the proper direction.

7. Before performing the high-pressure leak test, make sure that the butterfly valve or the OS&Y valve upstream of the deluge valve is closed, in order to prevent damage to the diaphragms in the valve and in the trim components.

RAPHAEL FP

FDV-R-3W-MH1

ADV – Manual Automatic Drain Valve

HAV - HAV-3 hydraulic Actuator Valve 3 way.

TS - Trim supply valve

OR - Orifice

CV– Check Valve

EV - Manual Emergency Unit

UBV – Upstream Butterfly Valve

HL – Hydraulic line

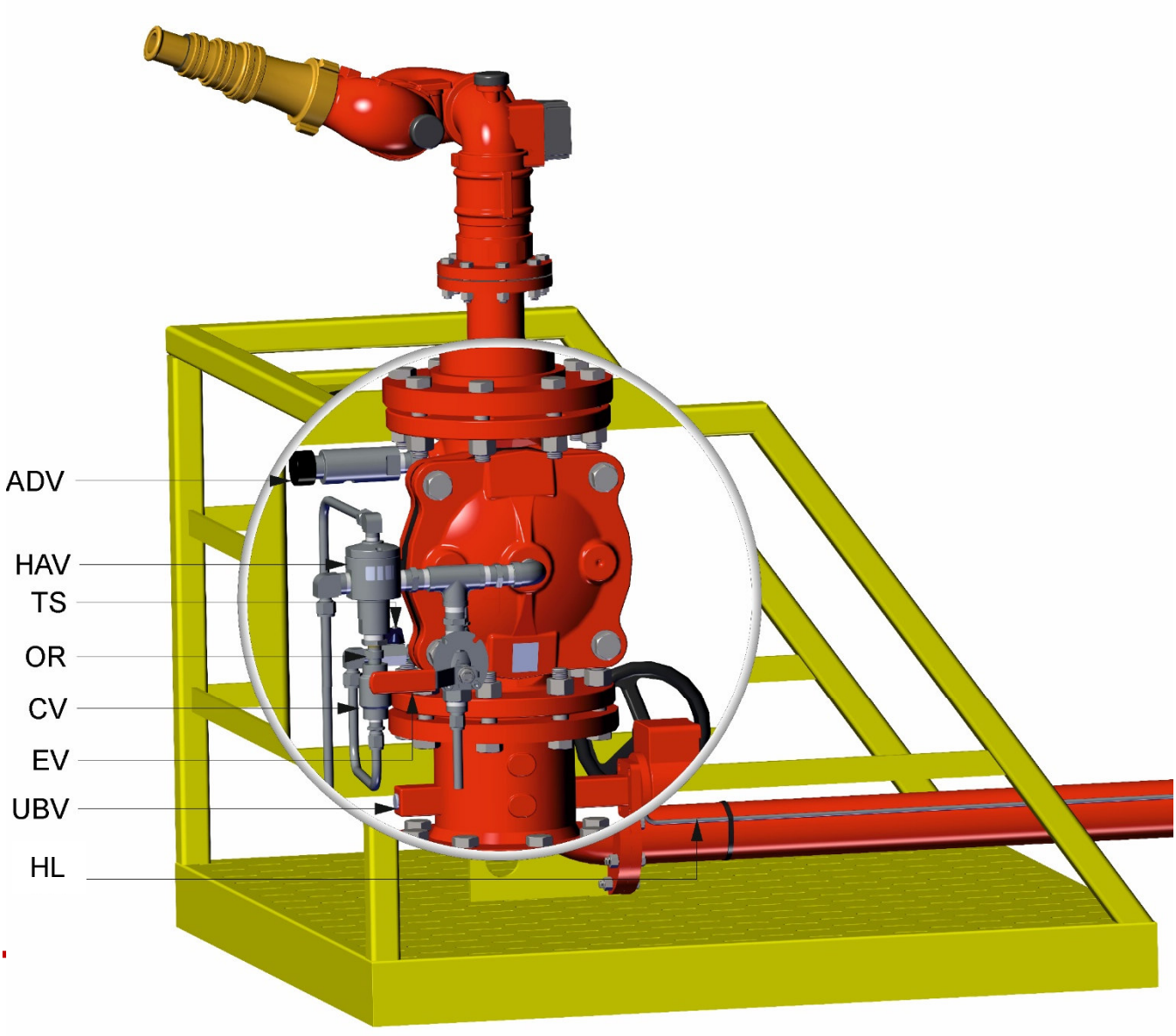

OPERATING INSTRUCTIONS (Reference Drawing - figure 2)

Flushing, pressurizing and operation the system.

The described procedure shall be carried out after completion of the system installation and a comprehensive inspection.
System filling and operation shall be performed only after the pipeline has been flushed.

1. Flushing must be performed while the trim supply valve (**TS**) is closed.

2. Ensure that the emergency valve (**EV**) is fully open.

3. Open the upstream butterfly valve (if installed) and allow water to flush the pipeline, the valve, and the monitor.

4. After flushing is completed, close the upstream butterfly valve and then close the emergency valve (**EV**).

5. Open the trim supply valve (**TS**).
6. Pressurize the wet pilot line.

7. Gradually open the upstream butterfly valve and verify that no water flows out of the monitor.

8. If satisfactory, open the inspector's valve. The valve should open and the monitor should spray water.

9. After closing the inspector's valve, the main valve should close. Verify that the monitor is drip-tight when closed.

10. Remove the strainer screen, flush it with clean water, and reinstall it.

The monitor valve is ready for the operation

MAINTENANCE

Prior to any stoppage of the fire protection system, a fire patrol should be placed in the area covered by the interrupted system.
Prior to generating any test procedures, turning on false alarms or turning off the alarm system, the local safety personnel and the close central fire station must be notified.

The Maintenance and inspection procedures are based on the relevant chapters at NFPA 25.

Monthly Inspection

1. Observe the FDV-R deluge valve and its trim for external damage: observe the trim piping and hose connections for leakage or damage.

2. Verify that the upstream separation butterfly valve and the Trim pressure supply valve (TS) are in fully open position.

3. Observe the MADV (ADV) and make sure that after emptying condensing water, the drain flow/dripping stops. If a constant leakage is observed, it might indicate a deluge valve sealing problem.

Annual test procedure

1. Conduct the monthly test & inspection procedure.

2. Operate the monitor valve by opening the inspector valve located at the wet pilot line's end.

3. Clean the strainer screen and re-install.

Every 5 years inspection procedure

This major inspection and maintenance procedure includes the removal of the trim, the dismantling of the FDV-R's valve cover and the performance of a comprehensive internal part examination. Then, the relevant trim accessories should be replaced, after completion, the Annual maintenance procedure is to be conducted.

1. Close the upstream butterfly valve.
2. Drain the FDV-R's control chamber using the emergency valve (**EV**).
3. Disconnect the hydraulic line connecting the valve to the wet pilot.
4. Release all relevant tubes, fitting nuts and the central union pipe connection (if equipped) at valves cover center.
5. Remove and disassemble the front trim.
6. Remove all the FDV-R's cover bolts.
7. Observer the internals of the valve and cover for excessive scale residuals, foreign particles, damaged coating (rust, cracks, or pealing).
8. Worn or damaged parts should be replaced. Consult Raphael's local representative or the service department for any maintenance issue or part replacement issue. Replace the Diaphragm. The identification tongue should point to the valve's stamped size side (from top view – at the left side).
9. Reinstall the valve's cover: use the Anti-seize paste supplied in the maintenance kit for bolts and nuts pre-installation lubrication. Tight it in accordance with **"Bolt's torque moments table".**
10. Reinstall the front trim carefully: avoid causing twists or dents on bent tubes and do not overtight the compression fitting's nuts.
11. When the system is fully reassembled, perform the **Operation instruction** (page 7)
12. Perform the **Annual test procedure.**

Bolt's Torque Moments Table

Valve size	2"	2.5"	3"	4"	6"	8"	10"
Torque lb/ft	22	29	36	54	65	72	87

MARKING

The FDV valves are marked by a laser engraved, black anodized, 0.8mm (0.031") thick metal plate, riveted to the valve's cover.

- *Company name and trademark.*
- *Short description (Italic letters)*
- *Application's type*: FDV-R-3W-MH1 – Hydraulic actuated Remote Reset.
- (P/N) *The Application's part number*: System properties–Valve properties
- *Rated pressure*: 250 psi
- *Serial Number*: Work order number-MM-YY-Number in batch 01-99
- *The UL listing mark & QR code:* EXxxxxx
- *The FM approved mark*
- *The Application's* diameter in inch: XX"

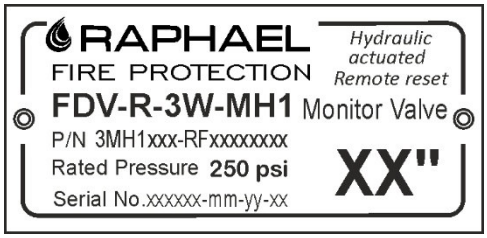

RAPHAEL FP

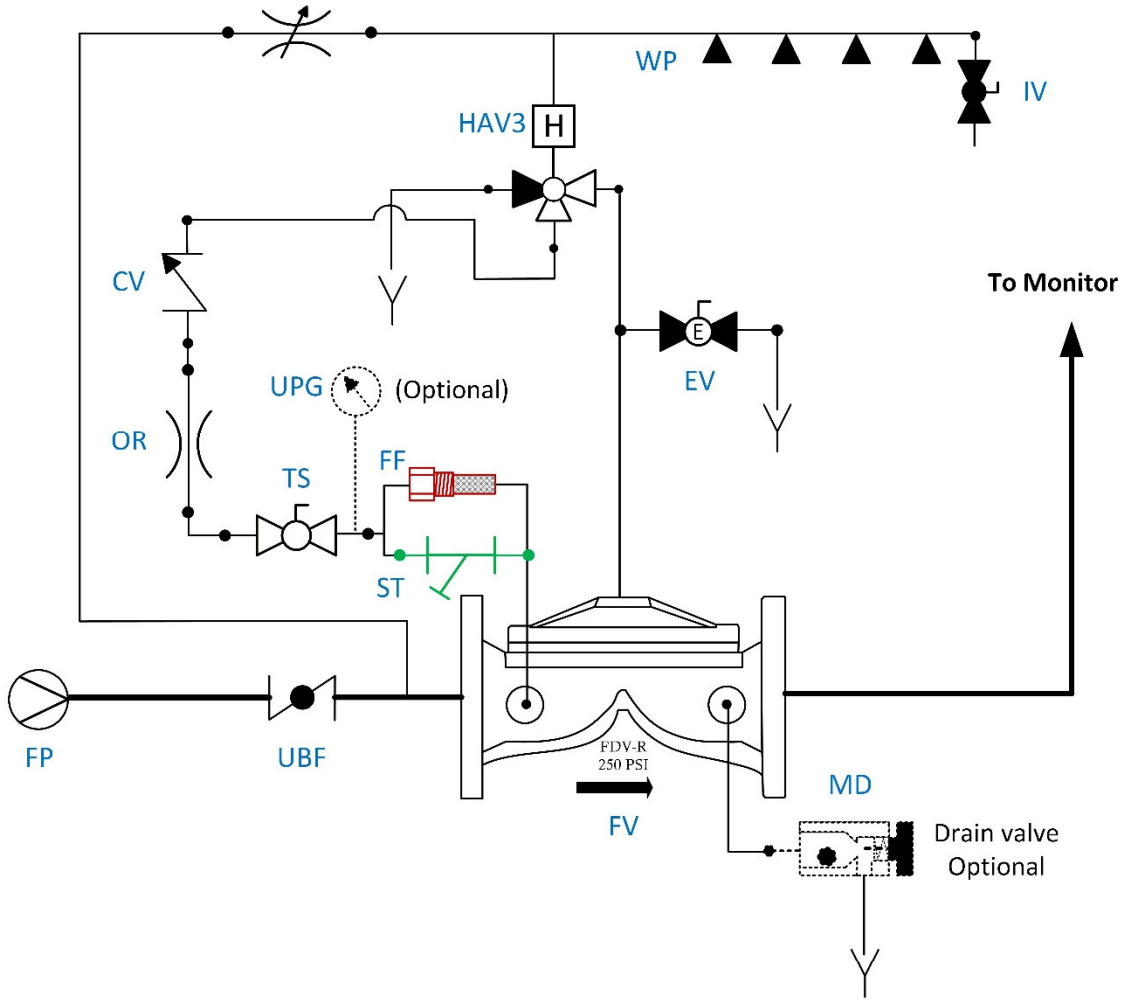

TS - Trim supply
FF - Finger filter
CV - Check Valve
UPG - Upstream pressure gauge
MD - MADV – Manual / Automtic Drain Valve
FP - Fire Pump
UBF - Upstream Butterfly Valve
FV - Control Valve
WP - Wet pilot line
EV - Manual Emergency Valve
IV - Inspector's valve

OR - Orifice
HAV3 - Hydraulic actuator (3-way)
ST - "Y" Strainer

Water lines

FF	1" - 4" (DN25 – DN100)
ST	6" - 16" (DN150 – DN400)

RAPHAEL FP

RAPHAEL, founded in 1949, is the first Israeli manufacturer of water control valves. RAPHAEL´s research department constantly strives to introduce new and innovative products and solutions for water control systems including water works, fire-protection and irrigation systems.



Dec-25