Hydraulically Actuated, Local Reset, Monitor Valve

FDV-R-3W-MH0

The FDV-R-3W-MH0 is a manually operated On-Off Fire Protection Monitor valve, designed to control the opening and closing of fire Monitors, in special hazard fire protection systems.

Assembled in horizontal or vertical position, the FDV-R-3W-MH0 Monitor valve is locally commanded to open/close by a manual emergency valve.

Operating this valve, commands the main valve by pressurizing or de-pressurizing its control chamber, enabling a quick and effortless operation

The globe pattern, line pressure operated FDV-R-3W-MH0 valve, features a direct elastomeric diaphragm seal, with no balancing spring or internal metallic wet components in the valve body.

The hydrodynamic pattern design, ensures high flow rates with minimum head loss.

This valve can be supplied upon request in a PRV configuration, were the monitor's pressure is reduced, to satisfy the system's design.



MARKETS

Marine · P.O.G. · Airports · Industry · Storage

TECHNICAL DATA

FLUID:
Water, Brackish water, Sea water, Foam

SIZE RANGE:
50mm to 200mm (2'' to 8'')

AVAILABLE CONNECTIONS ENDS:
Flange*Flange, Groove*Groove, Thread*Thread

PRESSURE NOMINAL:
250 psi (17.2 bar)

APPROVALS

ADVANTAGES

- Only three parts: body, diaphragm & cover plate. No wet metal spring inside the control chamber.
- 3 way control principle ensure fast and reliable opening.
- Open fail safe valve in high ambient temperatures.
- Maintained in stand-by closed position.
- Low maintenance cost: the valve can be serviced in-line and includes only one replaceable part — a long-life elastomeric diaphragm.
- Complies with NFPA 25, the standard for the inspection, testing, and maintenance of water-based fire protection systems.

CHARACTERISTICS

- Hydro-dynamic pattern design ensures high flowrates with minimum head loss.
- The valve trips open by manually opening a 3 way ball valve and draining the valve's control chamber.
- Closing the manual ball valve stops the control chamber's drainage and pressurizes it. By that, the monitor valve closes.
- Soft closing controlled pressurization of the valve's control chamber, prevents surges.

Schematic drawing:

FDV-R-3W-MH0

Set position

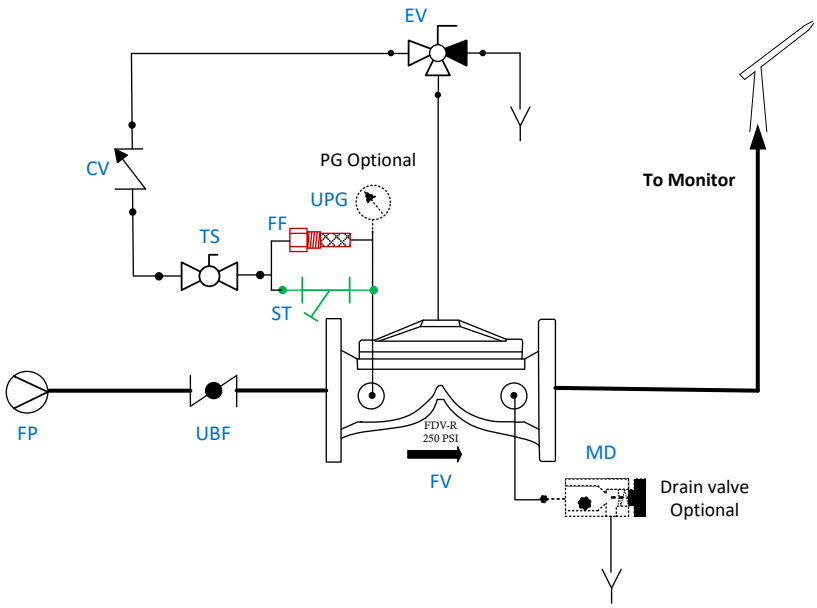

TS - Trim supply
FF - Finger filter
CV - Check Valve
UPG - Upstream pressure gauge
MD - MADV – Manual / Automtic Drain Valve
FP - Fire Pump
UBF - Upstream Butterfly Valve
FV - Control Valve
EV - Manual Emergency Valve3-way
ST - "Y" Strainer

Water lines

FF	1" - 4" (DN25 – DN100)
ST	6" - 16" (DN150 – DN400)

OPERATION

SET POSITION

Pressurized water in the valve's control chamber is trapped by the Check Valve (CV), forces the valve's diaphragm against its seat and maintains the FDV-R valve close.

FIRE SITUATION

Opening the Manual Operation valve (EV), drains the FDV-R's control chamber and opens the valve (FR).

RESET POSITION

Closing the Manual Operation valve, blocks the FDV-R's control chamber drainage to atmosphere, admits upstream pressure and pressurizes it. Consequently, the valve's diaphragm is forced to its seat and the valve closes.

When closed the riser pipe (RS) is drained by the Manual / Automatic drain valve (MD) – if equipped, to the atmosphere.

Raphael reserves the right to change the contents without notice

Typical installation

FDV-R-3W-MH0

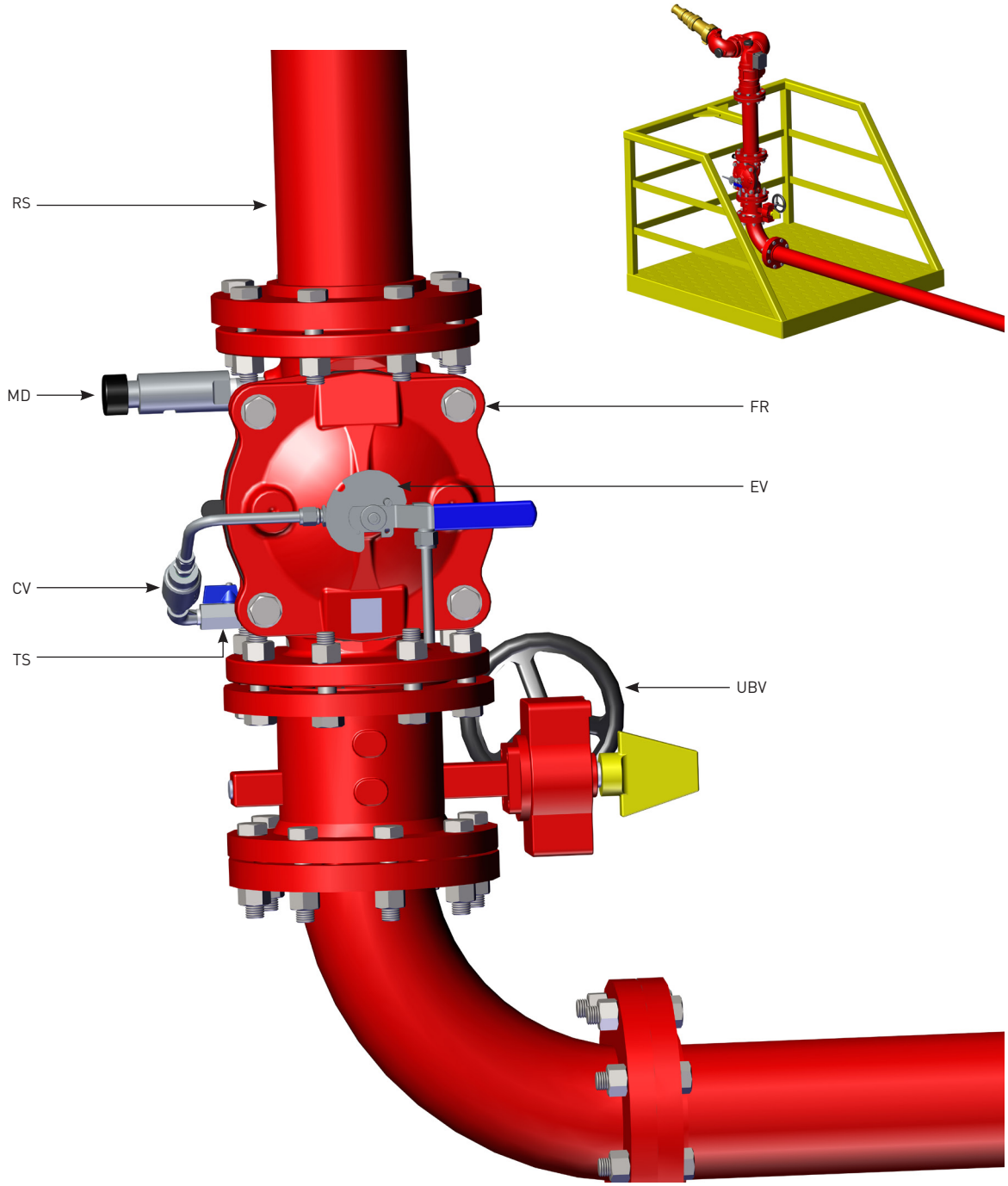

RS - Riser pipe
TS - Trim supply valve
CV - Check valve
EV - Emergency Valve
UBV - Upstream Butterfly Valve
FR - FDV-R control valve
MD - MADV - Manual Automatic Drain valve (optional).

Parametric drawing:

FDV-R-3W-MH0

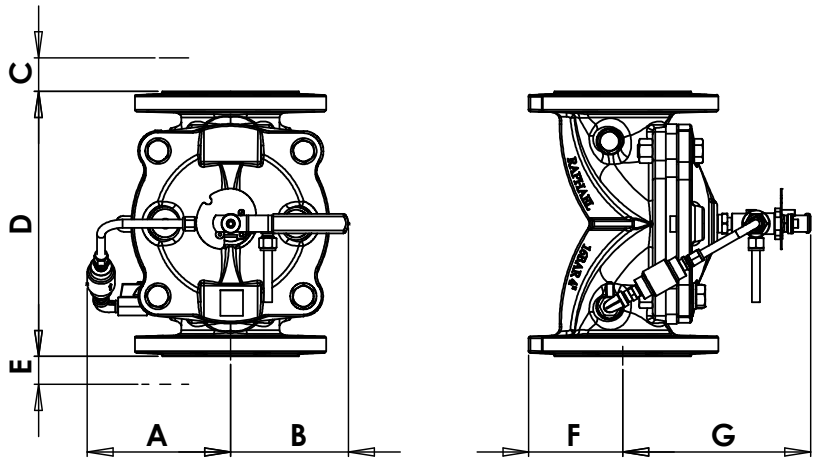

Dimensions Table

Size	2"		3"		4"		6"		8"		10"	
	mm	inch	mm	inch	mm	inch	mm	inch	mm	inch	mm	inch
A	121	4.7	135	5.3	166	6.5	192	7.5	235	9.2	267	10.5
B	136	53	133	5.2	137	5.4	150	5.9	177	7	233	9.1
C	N/A	N/A	N/A	N/A	N/A	N/A	N/A	N/A	N/A	N/A	N/A	N/A
D	190	7.5	283	11.1	305	12	406	16	470	18.5	645	25.4
E	N/A	N/A	N/A	N/A	N/A	N/A	N/A	N/A	N/A	N/A	N/A	N/A
F	83	3.3	100	3.9	109	4.3	142	5.6	160	6.3	197	7.7
G	168	6.6	197	7.7	218	8.6	264	10.4	335	13.1	343	13.5
Kg/lb	8.1	17.8	17.7	39	23.4	51.5	47.7	105	55.6	123	107	235

Factory Standard

MAIN VALVE

BODY & COVER

- Ductile iron
- Cast Steel WCB
- Stainless Steel CF8
- Stainless Steel CF8M
- Nickel Aluminum Bronze

ELASTOMERS:

- NR, fabric reinforced Natural Rubber
- EPDM, fabric reinforced
- NBR, fabric reinforced Nitrile Rubber

COATING:

- Base layer – high built Epoxy FBE
  Top layer – electrostatic Polyester powder RAL 3000
- Rilsan Polyamide based (Nylon 11)
- Internal – vitreous Enamel
  External – Epoxy/Polyester powder RAL 3000

TRIM

PIPING & TUBING:

- Stainless Steel 316
- Copper/Brass
- Cupro-Nickel
- Monel®

FITTINGS:

- Stainless Steel 316
- Brass
- Super Duplex
- Cupro-Nickel
- Monel®

ACCESSORIES:

- Stainless steel CF8M / 316
- Brass
- Nickel Aluminum Bronze
- SMO-245
- Monel®

PLEASE SPECIFY

- Working Media
- Ambiental conditions
- Min/Max operating flow
- Min/Max operating pressure
- System installation orientation
- Valve's flanges standard
- Additional accessories needed:
- Drain Ball valve
- Automatic Drain valve (MADV)
- Pressure gauge (size)

For more detailed technical information, please refer to chapter Engineering Data.

Raphael reserves the right to change the contents without notice