Hydraulically Actuated, Remote Reset, Monitor Valve

FDV-R-3W-MH1

The FDV-R-3W-MH1 is a hydraulic controlled On-Off Fire Protection Monitor valve, designed to control the opening and closing of fire Monitors, in special hazard fire protection systems.

Assembled in horizontal or vertical position, the FDV-R-3W-MH1 Monitor valve can hydraulically commanded to open/close from a control panel, control room, or by a wet pilot line. When exposed to flames heat, its automatic sprinklers will shutter open, drain the pilot line and operate the actuator. The actuator in turns, commands the valve by pressurizing or de-pressurizing the main valve's control chamber, enabling a quick and effortless operation.

The FDV-R-3W-MH1 incorporates an emergency valve, bypassing all terms for a manual operation.

The globe pattern, line pressure operated FDV-R-3W MH1 valve features a direct elastomeric diaphragm seal, with no balancing spring or internal metallic wet components in the valve body. The hydrodynamic pattern design ensures high flow rates with minimum head loss.



MARKETS

Marine · P.O.G. · Airports · Industry · Storage

TECHNICAL DATA

FLUID:
Water, Brackish water, Sea water, Foam

SIZE RANGE:
50mm to 200mm (2'' to 8")

AVAILABLE CONNECTIONS ENDS:
Flange*Flange, Groove*Groove, Thread*Thread

PRESSURE NOMINAL:
250 psi (17.2 bar)

APPROVALS

ADVANTAGES

- Only three parts: body, diaphragm & cover plate. No wet metal spring inside the control chamber.
- 3 way control principle ensure fast and reliable opening.
- Open fail safe valve in high ambient temperatures.
- Maintained in stand-by closed position.
- Low maintenance cost: the valve can be serviced in-line and includes only one replaceable part — a long-life elastomeric diaphragm.
- Complies with NFPA 25, the standard for the inspection, testing, and maintenance of water-based fire protection systems.

CHARACTERISTICS

- Hydro-dynamic pattern design ensures high flowrates with minimum head loss.
- The valve trips open automatically upon a gradual release of water pressure from its control chamber.
- The trip is actuated by a hydraulic command pressure transferred by a pilot pipeline, operating a 3 way actuator.
- Soft closing by controlled pressurization of the valve's control chamber, prevents surges.

Schematic drawing:

FDV-R-3W-MH1

Set position

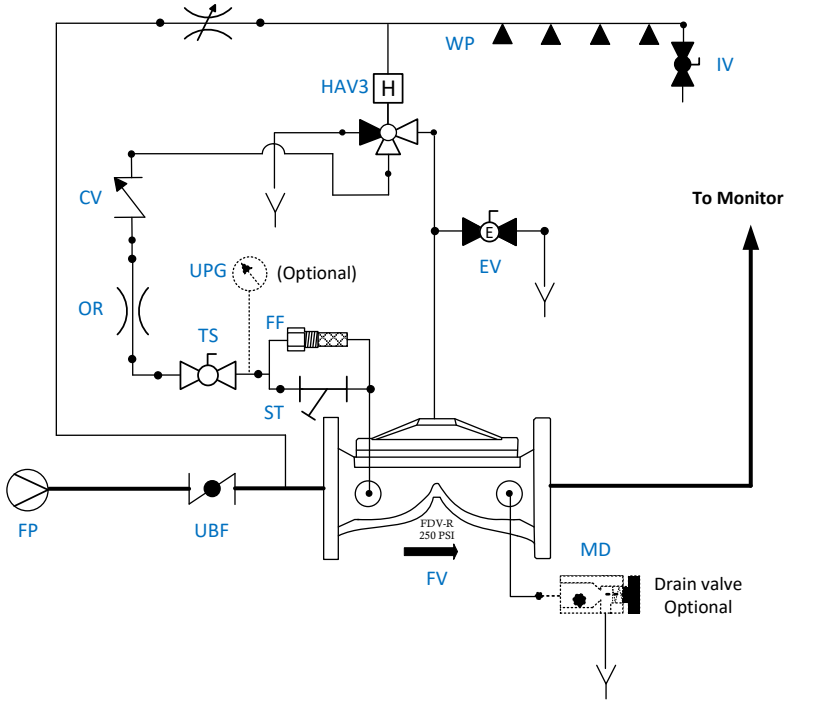

TS -	Trim supply	OR -	Orifice
FF -	Finger filter	HAV3 -	Hydraulic actuator (3-way)
CV -	Check Valve	ST -	"Y" Strainer
UPG -	Upstream pressure gauge		
MD -	MADV – Manual / Automtic Drain Valve		
FP -	Fire Pump		
UBF -	Upstream Butterfly Valve		
FV -	Control Valve		
WP -	Wet pilot line		
EV -	Manual Emergency Valve		
IV -	Inspector's valve		

Water lines

FF	1" - 4" (DN25 – DN100)
ST	6" - 16" (DN150 – DN400)

OPERATION

SET POSITION

Pressurized water supplied by the hydraulic actuator (HAV3) valve's control chamber, is trapped by the Check Valve (CV), forces the valve's dia¬phragm against its seat and maintains the FDV-R valve (FR), close.

FIRE SITUATION

A remote hydraulic command transferred by a wet pilot pipeline, de-pressurizes the Hydraulic Actuator valve's (HAV3) control Chamber.

Consequently, the actuator change state and drains the FDV-R's Control Chamber. The valve opens and admits water to the monitor riser pipeline.

Opening the Manual Operation valve (EV), bypasses all term, drains the FDV-R's control chamber and opens the valve.

RESET POSITION

As the pilot pipeline command pressure increases, the Hydraulic Actuator stops the FDV-R's control chamber drainage and admits upstream to the VDV-R's control chamber. Consequently, the valve's diaphragm is forces against its seat and the valve closes.

Raphael reserves the right to change the contents without notice

Typical installation

FDV-R-3W-MH1

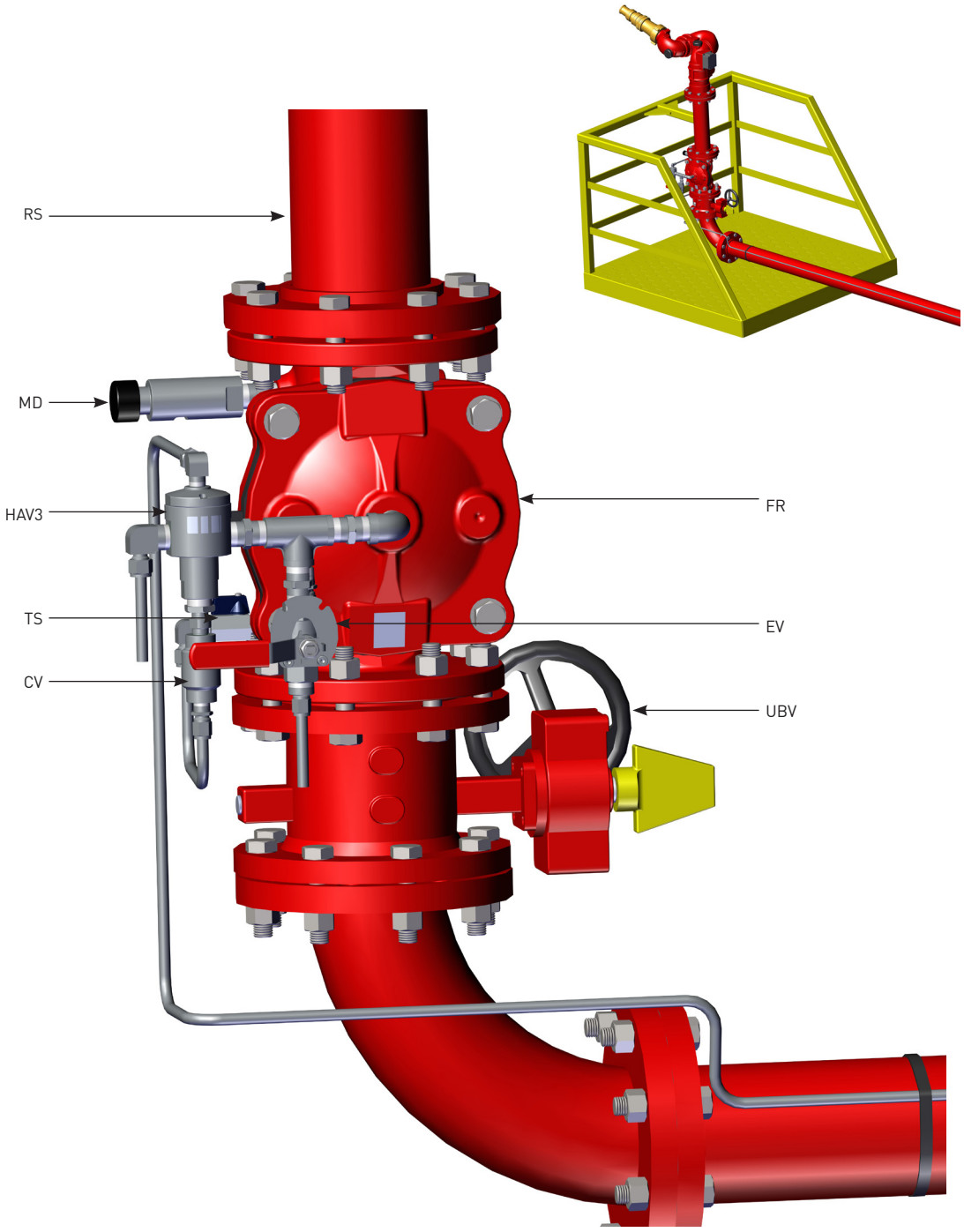

RS - Riser pipe
TS - Trim supply valve
CV - Check valve
EV - Emergency Valve
HAV3 - Hydraulic Actuator Valve (3 way)
UBV - Upstream Butterfly Valve
FR - FDV-R control valve
MD - MADV - Manual Automatic Drain valve (optional).

Parametric drawing:

FDV-R-3W-MH1

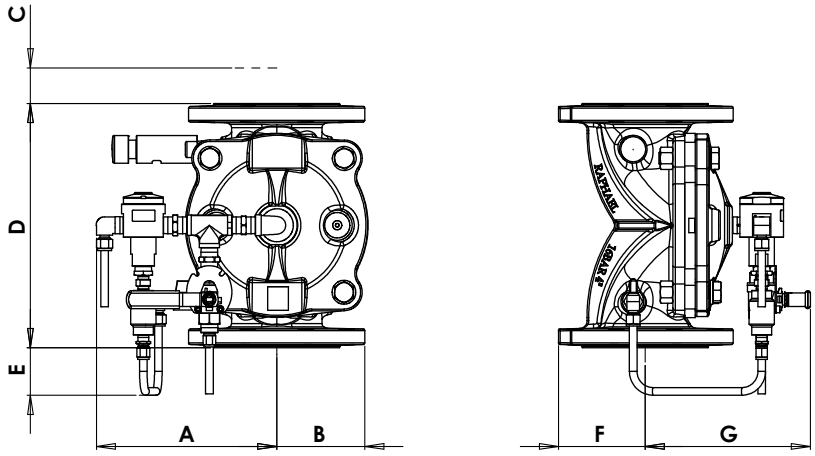

Dimensions Table

Size	2"		3"		4"		6"		8"		10"	
	mm	inch	mm	inch	mm	inch	mm	inch	mm	inch	mm	inch
A	210	8.2	210	8.2	210	8.2	245	9.6	264	10.3	281	11.6
B	82	3.2	100	3.9	111	4.3	142	5.6	180	7	233	9.1
C	N/A	N/A	N/A	N/A	N/A	N/A	N/A	N/A	N/A	N/A	N/A	N/A
D	190	7.5	283	11.1	305	12	406	16	470	18.5	645	25.4
E	118	4.6	71	2.79	60	2.6	43	1.7	36	1.4	N/A	N/A
F	82	3.2	100	3.9	109	4.3	142	5.6	159	6.2	197	7.7
G	147	57	176	6.9	196	7.7	242	9.5	315	12.4	364	14.3
Kg/lb	9.8	21.6	18.8	41.4	25.5	56.2	50	110.	57.4	126	109	240

Factory Standard

MAIN VALVE

BODY & COVER

- Ductile iron
- Cast Steel WCB
- Stainless Steel CF8
- Stainless Steel CF8M
- Nickel Aluminum Bronze

ELASTOMERS:

- NR, fabric reinforced Natural Rubber
- EPDM, fabric reinforced
- NBR, fabric reinforced Nitrile Rubber

COATING:

- Base layer – high built Epoxy FBE
  Top layer – electrostatic Polyester powder RAL 3000
- Rilsan Polyamide based (Nylon 11)
- Internal – vitreous Enamel
  External – Epoxy/Polyester powder RAL 3000

TRIM

PIPING & TUBING:

- Stainless Steel 316
- Copper/Brass
- Cupro-Nickel
- Monel®

FITTINGS:

- Stainless Steel 316
- Brass
- Super Duplex
- Cupro-Nickel
- Monel®

ACCESSORIES:

- Stainless steel CF8M / 316
- Brass
- Nickel Aluminum Bronze
- SMO-245
- Monel®

PLEASE SPECIFY

- Working Media
- Ambiental conditions
- Min/Max operating flow
- Min/Max operating pressure
- System installation orientation
- Valve's flanges standard
- Additional accessories needed:
- Drain Ball valve
- Automatic Drain valve (MADV)
- Pressure gauge (size)

For more detailed technical information, please refer to chapter Engineering Data.

Raphael reserves the right to change the contents without notice