IOM FDV-PE1

Electric Actuation with Remote Reset and Pressure reducing Deluge Valve

INSTALLATION OPERATION & MAINTENANCE MANUAL

FIRE PROTECTION

RAPHAEL VALVES INDUSTRIES

Description

This deluge system is based on Raphael's FDV valve, equipped with an electrically actuated control trim. The installed FDV valve is available in a range of optional materials and coatings to meet the required operating conditions, but the system's functional principle remains unchanged: in a fire event, the electrical detection system activates the control trim by energizing its solenoid. As a result, the pressurized water trapped in the FDV control chamber is released, the valve opens, and the spray-nozzle pipeline becomes pressurized.



This system can reduce the upstream pressure to a predetermined downstream pressure and maintain it at a stable level. It responds to any downstream pressure fluctuations caused by changes in flow demand and keeps the downstream pressure constant.

The system is suitable for water-spray pipelines with open nozzles

Operation (reference - figure 1)

SET position:

The trim is supplied by the trim supply valve (**8**), "Y" strainer (**7**), check valve (**6**), flows through the needle valve (**3**), and fills the FDV's control chamber. Pressurized water in the valve's control chamber gets trapped by the check-valve (**6**), by the solenoid (**9**) and by the closed emergency valve MEU (**11**), maintaining the deluge valve in closed position.

FIRE situation:

When one or more of the electric fume/heat sensors is tripped, it energizes the 2-way solenoid (**9**) through the control panel. Getting tripped, this solenoid drains the FDV's control chamber through the PRPV pilot to the valves downstream. The FDV deluge valve opens and water flow into the sprinklers pipeline/s. The PRPV pilot senses the downstream pressure and regulates the FDV's valve accordingly.

Opening the MEU door and pulling down the ball valve's handle, bypasses all terms, drains the FDV control chamber and opens the valve immediately.

RESET position.

De-energizing the solenoid will close the FDV valve and turn the system's mode into SET position: while the closed solenoid blocks the valve's control chamber drainage, upstream pressure constantly enters this control chamber through the orifice and pressurizes it. When the control chamber is pressurized, it closes the deluge valve and the sprinkler's water spray stops.

It is recommended to drain the sprinklers pipeline by opening the ball valve connected to the FDV's downstream drain valve (**14**) or pressing the MADV's push button.

Parts list (reference figure 1)

1. – Downstream pressure gauge
2. – PRPV Pressure reducing pilot
3. – Needle valve
4. – Pressure switch conn. ½" NPT (optional)
5. – Alarm test valve (3 way)
6. – Check valve
7. – "Y" Strainer
8. – Trim Pressure Supply Valve
9. – Solenoid (2 way)
10. – Control chamber pressure gauge
11. – EMU Emergency valve (2 way)
12. – MADV (MB) drain valve
13. – Upstream drain port (plugged)
14. – Downstream drain valve
15. – Water Motor Alarm conn. ½" NPT (optional).

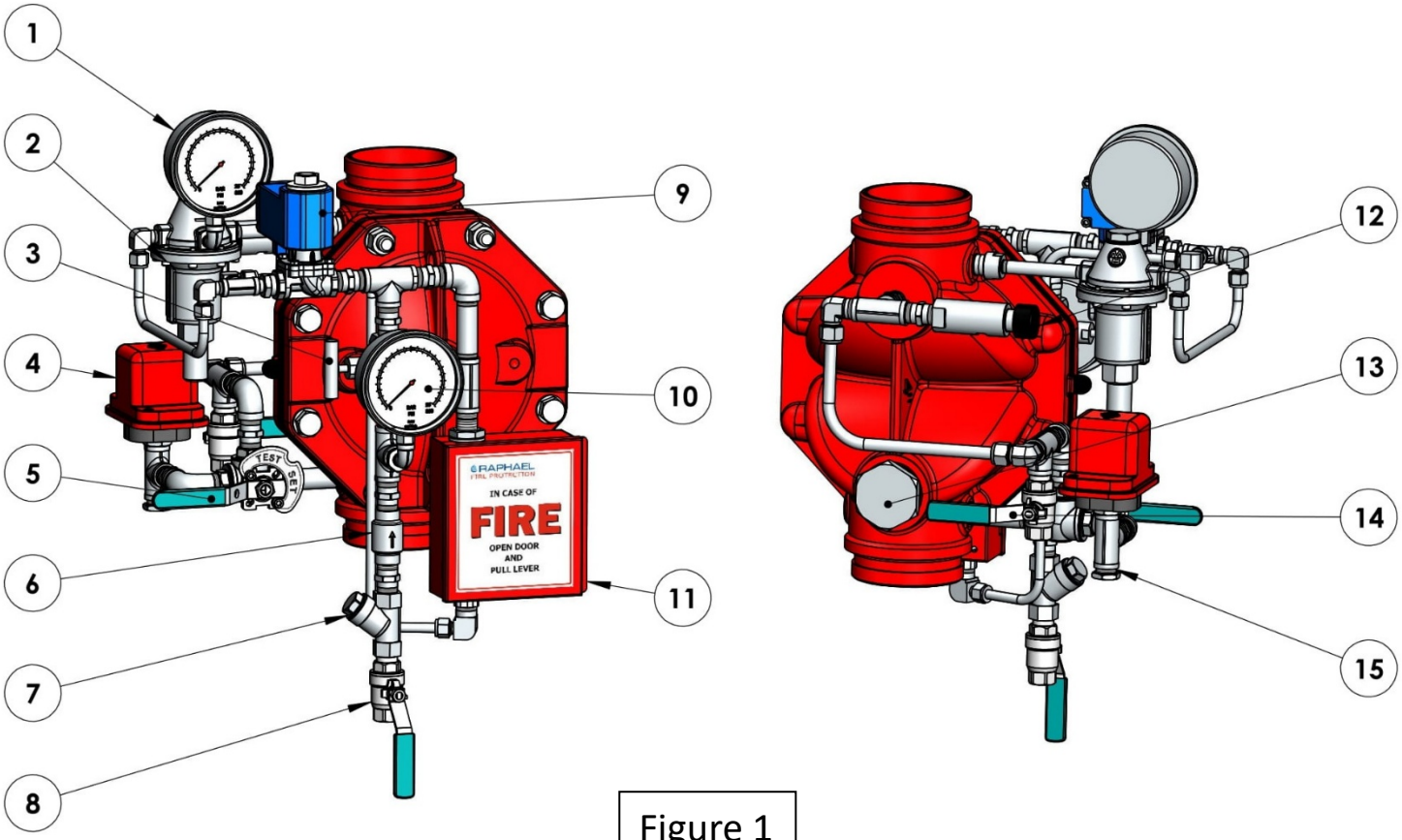

Figure 1

Installation (reference - figure 2)

1. This system is supplied pre-assembled and factory pre-adjusted. Any change carried out This system is supplied pre-assembled and factory pre-adjusted, including the PRPV pilot's set pressure and needle valve position. Any change carried out at the system's trim components adjustments or order, pipe and tubes length or ports for axillary connection sizes, will affect the system operation and therefore prohibited.
2. The system cannot be installed at a location where it might be subjected to freezing temperatures.
3. Sufficient room around the system location should be kept, to enable assembly/disassembly and maintenance work.
4. It should be considered that water will be drained during regular maintenance on a routine basis, during periodical tests procedures and when operating in fire situations. Therefore, a drainage plan should be considered.
5. The system described is to be mounted vertically only. Systems with identical operation but for horizontal installation are marked with a prefix "H", e.g. HFDV-PE1.
6. The downstream pipe connected to the FDV valve at a horizontal or vertical mount needs to be supported firmly to prevent the pipeline's weight from loading on the system's valve.
7. Any use of pipe/thread reduction-fittings installed at open ports designated for axillary components, (like water motor alarm, pressure switch, trim pressure supply, FDV valve's drains, etc.), is prohibited.
8. All connections to water supply, alarms etc. should be done in accordance with figure 2:
   (**1**) – Trim pressure supply connection (1/2" NPT)
   (**6**) – Water motor alarm connection (connect ½" to ¾" NPT nipple)
   (**8**) – Pressure switch connection – optional (1/2" NPT)
   (**7**) – Downstream drain valve (1/2" NPT)
9. The FDV valve should be installed with the flow arrow marked on the valve's body, in the proper direction

10. Before performing the high-pressure leak test, make sure that the butterfly valve or the OS&Y valve upstream of the deluge valve is closed, in order to prevent damage to the diaphragms in the valve and in the trim components.

11. Make sure that the gong connected to its designated outlet is supported so that its weight, along with the weight of the piping attached to it, is not applied to the valve trim.

Installation parts list

(reference - figure 2)

1. Trip supply valve (1/2” NPT female)
2. “Y” Strainer
3. Check valve
4. Control chamber pressure gauge
5. 3-way Test/Set ball valve
6. Water motor alarm connection (1/2 NPT female plugged)
7. Downstream drain valve (1/2" NPT female)
8. Pressure switch ***** (1/2” NPT female connection) *
9. PRPV Pressure Reducing pilot
10. Main control board
11. Downstream pressure gauge
12. Heat/Smoky detection sensors
13. Downstream separation butterfly valve
14. Solenoid valve (2 way)
15. Upstream separation butterfly valve
16. Control chamber pressure gauge
17. MEU manual Emergency Unit
18. Downstream separation butterfly valve

*** Optional**

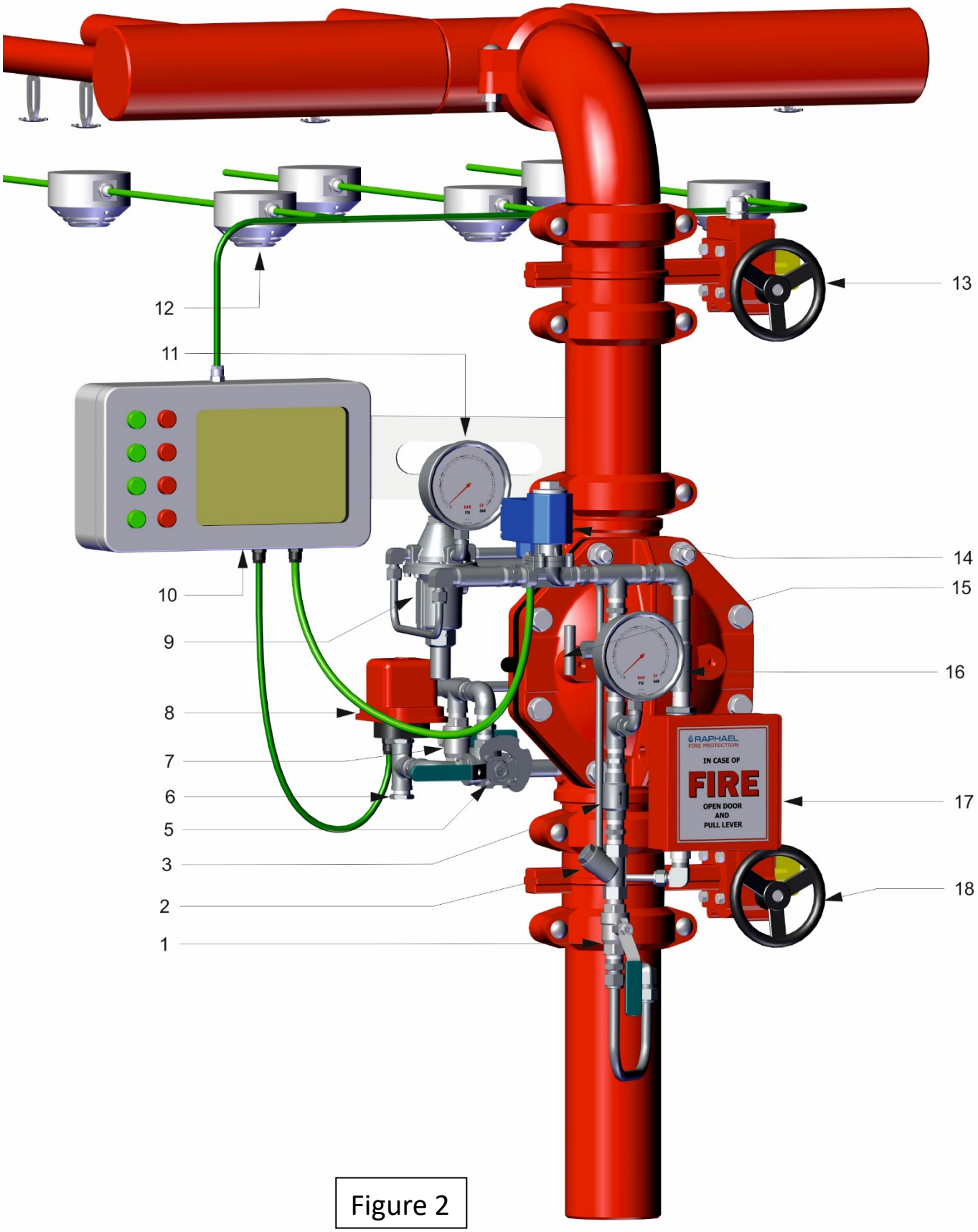
12
11
10
9
8
7
6
5
3
2
1
13
14
15
16
17
18
RAPHAEL
FIRE PROTECTION
IN CASE OF
FIRE
OPEN DOOR
AND
PULL LEVER

Figure 2

Commissioning the system - phase 1.

Filling and pressurizing the system.

The procedure described should be carried out after system installation completion and a comprehensive inspection.

(Reference drawing - figure 2)

1. Make sure the upstream butterfly valve (**18**) is fully closed.
2. Make sure the solenoid (**14**) is de-energized.
3. Make sure the trim pressure supply ball valve (**1**) is Closed.
4. Make sure that MEU door (**17**) is fully closed. If open – turn valve's lever upwards and close the door.
5. Make sure the FDV's downstream drain valve (**7**) is open and upstream drain valve if equipped is closed.
6. Open the trim pressure supply valve (**1**).
7. Open gradually the upstream butterfly valve (**18**) and make sure the downstream drain valve (7) is not dripping. A dripping may indicate an FDV valve sealing issue. (see Troubleshooting chapter in FDV's basic valves datasheet & IOM bulletin)
8. Close the Downstream drain valve.
9. Turn On the electric detection system.

The system is ready for the fire situation simulation.

Commissioning the system - phase 2.

Fire Situation Simulation

The procedure described, should be carried out after the system was pressurized and a comprehensive leakage inspection was commissioned.

Energizing the solenoid can simulate a fire situation and cause the system to response by opening the FDV deluge valve.

NOTICE:
Prior to any stoppage of the fire protection system, a fire patrol should be placed in the area covered by the interrupted system.
Prior to generating any test procedures, turning on false alarms or turning off the alarm system, the Remote safety personnel and the close central fire station must be reported.

(Reference drawing - figure 2)

1. Energize the solenoid through the main control panel (**10)**. Trapped water will drain out from the FDV's control chamber.

2. Fully open the downstream drain valve (**7**).

3. Observe the pressure gauge installed on the pressure reducing pilot valve (**11**): Downstream pressure correction if needed, is performed by this method -
   *- to **increase** the pressure – turn the pilot's adjusting screw **clockwise***
   *- to **decrease** the pressure – turn the pilot's adjusting screw **anticlockwise.***

4. Assure the functionality of the pressure-reducing pilot and the downstream pressure steadiness: While the FDV valve is open, turn the downstream drain valve handle and close it gradually. Assure that the pressure reaches SET again. Then, open this ball valve halfway. Observe the downstream gauge reading - it should reach again to SET pressure.

5. Turn off the solenoid valve through the main control board (**10**). FDV deluge valve should close.

6. Close the upstream butterfly valve (**12**) and drain the residual upstream pressure by opening the downstream drain valve (**7**).

End of Fire Situation Simulation

Commissioning the system - phase 3.

Resetting & placing in service

The procedure described, should be carried out after any periodic operational test, simulated or real fire situation.

After a real fire situation, make sure that the SOV is closed by de-energizing its coil (through the FP main control board). (Reference drawing - figure 2)

1. Close the trim pressure supply valve (**1)**.
2. Close the upstream butterfly valve (**18**)
3. Make sure that the solenoid valve (**14**) is De-energized.
4. Clean the “Y” strainer (**2**) screen and reassemble.
5. Open the trim pressure supply valve (**1**) and observe the control chamber pressure gauge (**16**) for the inlet pressure value. FDV’s control chamber is pressurized, and the valve is close.
6. Open the upstream butterfly valve (**18**)
7. Open downstream drain valve (**7**). Drain the pipeline and close. At drainage end, close this valve.

System is in SET state and placed in service.

Maintenance

Prior to any stoppage of the fire protection system, a fire patrol should be placed in the area covered by the interrupted system. Prior to generating any test procedures, turning on false alarms or turning off the alarm system, the Remote safety personal and the close central fire station must be notified. Maintenance and inspection procedures follow the NFPA 25 instructions for deluge valves.

Daily Inspection

Make sure that the deluge valve's heating system (If equipped), functions correctly and that the Fire protection valve surrounding temperature is 4°C min.

Monthly Inspection

1. Observe the FDV valve for external damage: observe the piping and hose connections for leakage or damage.
2. Verify that the upstream butterfly valve (**18**) and the Trim pressure supply valve (**1**) are in fully open position.
   Downstream drain valve (**7**) and upstream drain valve (if equipped) are fully close.

3. Push the MADV (MB) (**12 figure 1**) and make sure that after emptying condensing water, the drain flows/dripping stops. If a constant leakage is observed, it might indicate a deluge valve sealing problem.

4. Move the 3-way SET/TEST valve to TEST. The acoustic alarm should sound, and alarm pressure switch (**5**) should transmit a signal to the main control board.

Annual test procedure

1. Conduct the monthly inspection procedure.

2. Perform the procedure described in chapter - **Commissioning the system - phase 2. -** Fire Situation Simulation. Check and confirm the system's proper operation.

3. Follow the procedure described in chapter - **Commissioning the system - phase 3**. - Resetting & placing in service. Check and confirm the system's proper operation.

Every 5 years inspection procedure

This major inspection and maintenance procedure includes the removal of the trim, the dismantling of the FDV's valve cover and a performance of a comprehensive internal part examination. Then, the relevant trim accessories should be maintained, referring their maintenance instruction. After the completion, the Annual maintenance procedure is to be conducted.

1. Close the upstream butterfly valve (**18**) and the trim pressure supply valve (**1**).

2. Open the drain valves (**7**) and the upstream drain valve (if equipped). Drain the FDV's control chamber using the EMU Emergency valve (**17**).

3. Turn off or disconnect all relevant electrical circuits.

4. Release all relevant tubes fitting nuts and the central union pipe connection (if equipped) at valves cover center.

5. Remove the disassembled trim.

6. Remove all the FDV's cover bolts. In vertical orientation (from 4" DN100 valve and up), the cover will hang on its studs. Release both nuts and remove the cover carefully.

7. Observer the internals of the valve and cover for excessive scale residuals, foreign particles, damaged coating (rust, cracks, or pealing).

8. Worn or damaged parts should be replaced. Consult Raphael's Remote representative or the service department for any maintenance issue or part replacement issue.

9. Replace the Diaphragm. The identification tongue should point to the valve's stamped size (diameter in inch) side.

10. Reinstall the valve's cover: use the Anti-seize paste tube supplied in the maintenance kit for bolts and nuts lubrication. Tight them in accordance with "Bolt's torque moments table".

11. Reinstall the trim carefully: avoid causing twists or dents on bent tubes and do not overtight the compression fitting's nuts.

12. When the system is fully reassembled, perform the "**Commissioning the system - phase 1** - Filling and pressurizing the system" procedure.

13. Perform the "**Annual maintenance procedure**".

Bolt's Torque Moments Table

Valve size	1.5"	2"	2.5"	3"	4"	6"	8"	10"
Torque lb/ft	22	29	36	54	65	72	87	118

Equivalent pipe length for FDV deluge valves

Valve size	**Equivalent length value ft (m)**
1.5"	11 (3.6)
2"	24 (7.3)
2.5"	25 (7.6)
3"	28 (8.5)
4"	31 (9.4)
6"	46 (14)
8"	72 (21.9)
10"	117 (35.6)

Marking

The FDV valves are marked by a laser engraved, black anodized, 0.8mm (0.031”) thick metal plate, riveted to the valve’s cover.

The marking plate contains the data about (top to bottom):

- *Company name and trademark.*
- *Short description (Italic letters)*
- *Application’s type*: FDV-PE1 - Electric actuated Remote Reset Pressure Reducing.
- (P/N) *The Application’s part number*: System properties–Valve properties
- *Rated pressure*: 250 psi
- *Equivalent Length: reference table - page 13.*
- *Serial Number*: Work order number-MM-YY-Number in batch 01-99
- *The UL listing mark & QR code:* EXxxxxx
- *The FM approved mark*
- *The Application’s* diameter in inch: XX”

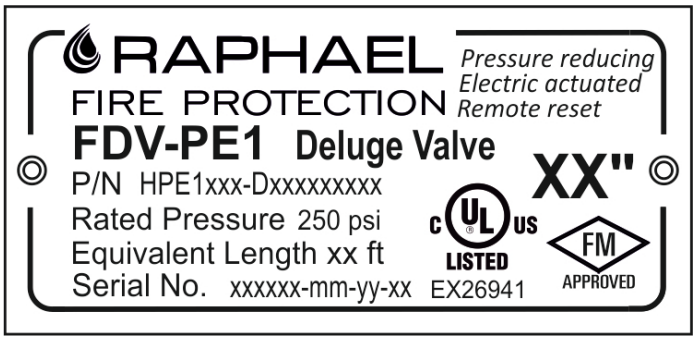

RAPHAEL FP

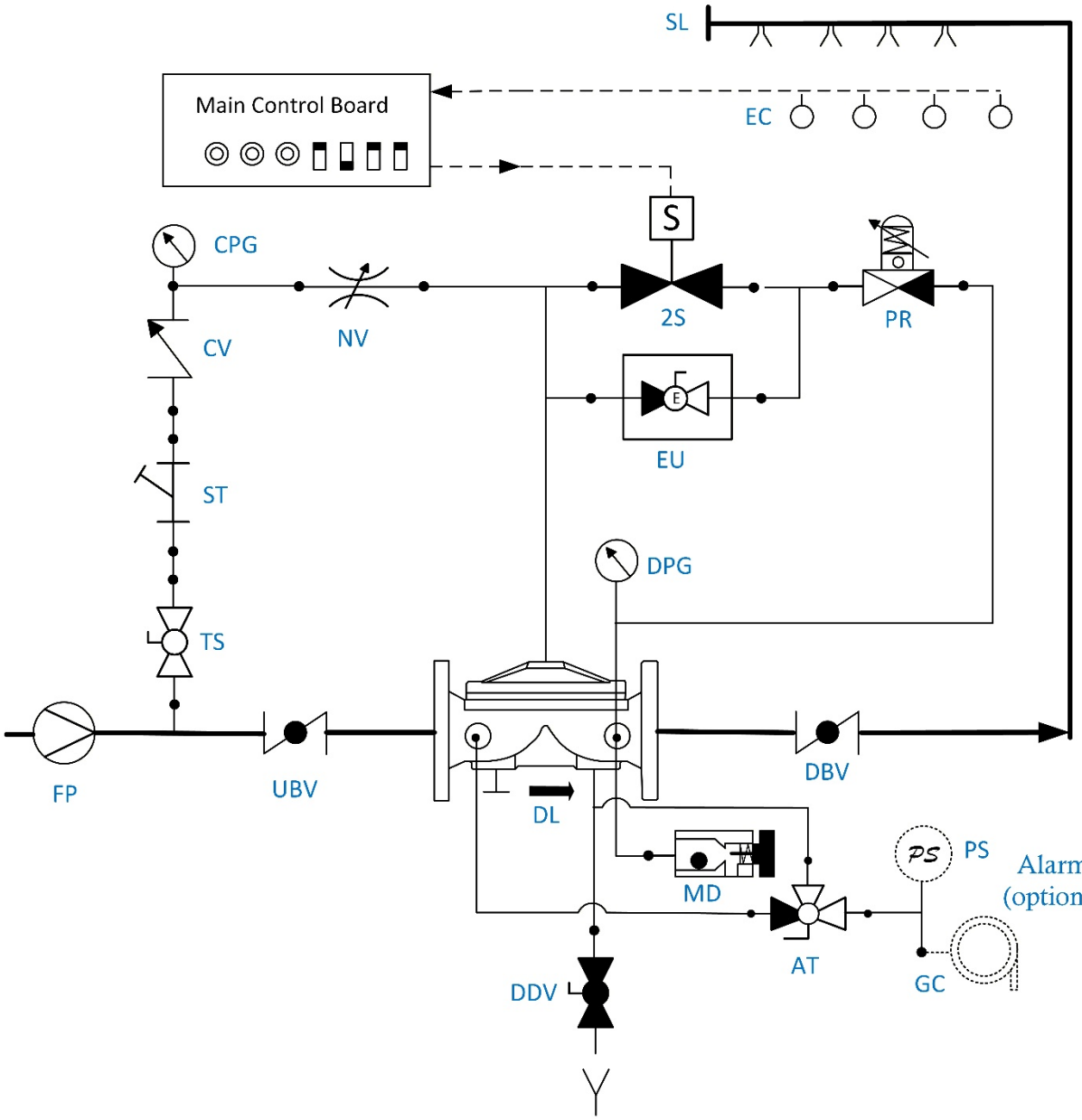

TS -	Trim supply	UBV -	Upstream Butterfly Valve		Water lines
ST -	Strainer	DBV -	Downstream Butterfly Valve		
AT -	Alarm Test valve	CPG -	Control Chamber P. gauge		Electrical line
GC -	Gong connection	DPG -	Downstream Pressure gauge		
CV -	Check Valve	S2 -	2-way Solenoid valve	PR -	PRPV Pressure Reducing Pilot Valve
NV	Needle Valve	EU -	Manual Emergency Valve		
PS -	Pressure Switch	SL -	Sprinkles Line		
DL -	Deluge Valve	DDV -	Downstream Drain Valve		
MD -	MADV – Manual / Automtic Drain Valve	FP -	Fire Pump		
ES -	Electric Sensors System	SL -	Sprinklers Line		

RAPHAEL, founded in 1949, is the first Israeli manufacturer of water control valves. RAPHAEL´s research department constantly strives to introduce new and innovative products and solutions for water control systems including water works, fire-protection and irrigation systems.



RAPHAEL

RAPHAEL Valves Industries (1975) Ltd.

North Industrial Zone Or Akiva, 3063927 P.O.Box 555, Israel

Tel. +972 4 6263555 | info@raphael-valves.com | raphael-valves.com