Electrically Actuated, Remote Reset, Pressure Reducing Deluge Valve — FDV - PE1

This deluge system is based on Raphael's FDV valve, equipped with an electrically actuated control trim. The installed FDV valve is available in a range of optional materials and coatings to meet various operational conditions. However, the system's functional principle remains unchanged: in the event of a fire, an electrical detection system activates the valve's control trim by energizing its solenoid coil. As a result, pressurized water trapped in the FDV control chamber is released, the valve opens, and the spray nozzle pipeline becomes pressurized.

This system is capable of reducing upstream pressure to a pre-set downstream pressure and maintaining it at a steady level. It responds to any downstream pressure fluctuations caused by changes in flow demand, ensuring a stable set pressure.



MARKETS

Marine · P.O.G. · Airports

TECHNICAL DATA

FLUID: Water, Brackish water, Sea water, Foam

SIZE RANGE:
40mm to 250mm (1½'' to 10'')

AVAILABLE CONNECTIONS ENDS:
Flange*Flange, Groove*Groove, Flange*Groove, Groove*Flange, Thread*Thread

PRESSURE NOMINAL:
250 psi (17.2 bar)

REGULATION RATIO: 5:1

SENSITIVITY:
1.45 psi (0.1 Bar)

APPROVALS

ADVANTAGES

- Only three parts: body, diaphragm & cover plate. No wet metal spring inside the control chamber
- Unobstructed full-bore valve
- Simple manual reset of the valve to standby
- Open fail-safe valve, maintained in stand-by closed position
- Low maintenance cost: the valve can be serviced in-line and includes only one replaceable part — a long-life elastomeric diaphragm.
- Complies with NFPA 25, the standard for the inspection, testing, and maintenance of water-based fire protection systems.

CHARACTERISTICS

- Hydro-dynamic pattern design ensures high flowrates with minimum head loss
- The valve trips open automatically upon a gradual release of water pres-sure from its control chamber.
- The valve is actuated by an electric signal transmitted to the valve's solenoid from the main control valve panel, due to a flame heat exposure of electrical detection sensors system
- A pressure reducing pilot valve enables a full control over the downstream pressure and ensures a steady set in a wide pressure range.

The FDV-PE1 resets to stand-by close position by de-energizing the alarm system solenoid's coil through the main control panel.

Schematic drawing:

FDV-PE1

Set position

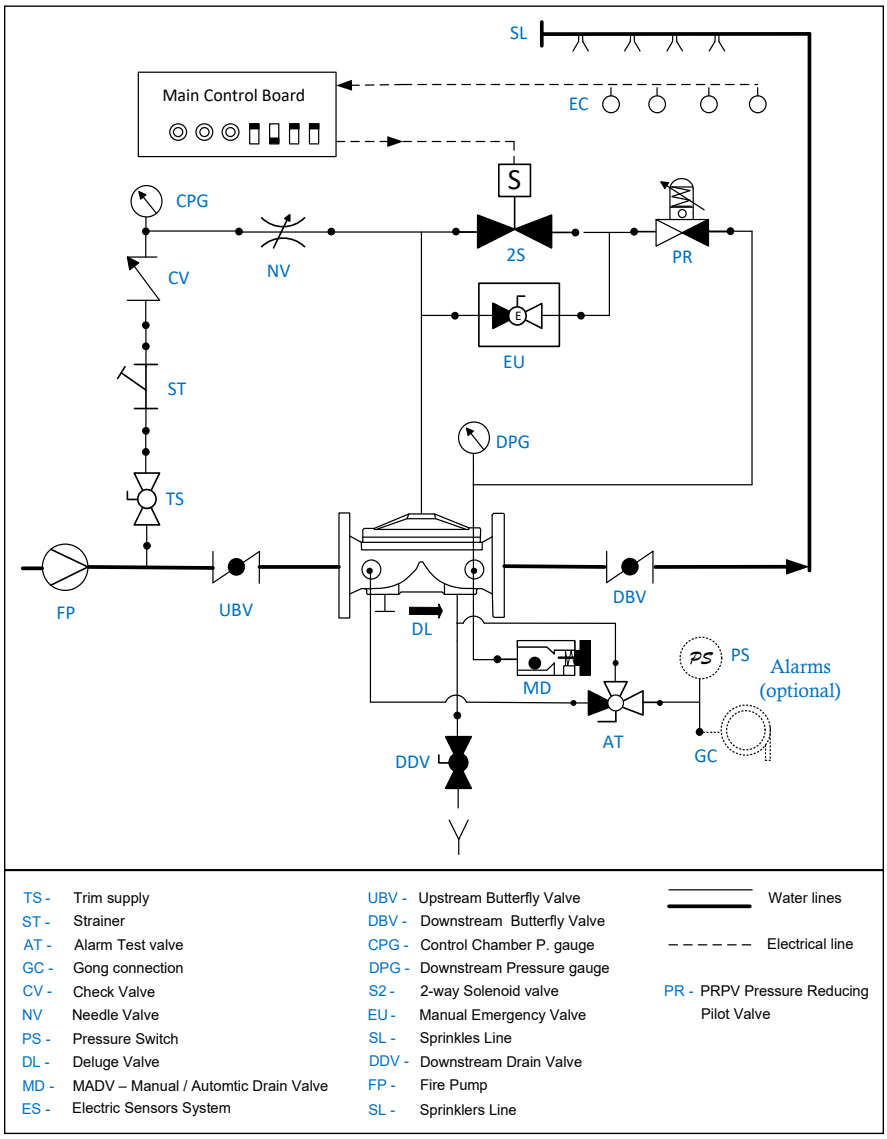

TS -	Trim supply	UBV -	Upstream Butterfly Valve		Water lines
ST -	Strainer	DBV -	Downstream Butterfly Valve		
AT -	Alarm Test valve	CPG -	Control Chamber P. gauge		Electrical line
GC -	Gong connection	DPG -	Downstream Pressure gauge	PR -	PRPV Pressure Reducing Pilot Valve
CV -	Check Valve	S2 -	2-way Solenoid valve		
NV	Needle Valve	EU -	Manual Emergency Valve		
PS -	Pressure Switch	SL -	Sprinkles Line		
DL -	Deluge Valve	DDV -	Downstream Drain Valve		
MD -	MADV – Manual / Automtic Drain Valve	FP -	Fire Pump		
ES -	Electric Sensors System	SL -	Sprinklers Line		

OPERATION

SET POSITION

Pressurized water in the valve's control chamber [DL] is trapped by the check valve [CV], by the closed 2-way solenoid [S2] and by the closed emergency valve [EU], maintaining the FDV deluge valve [DL] closed.

FIRE SITUATION

When an electric detection system [ES] senses flames heat, it triggers the main control panel that in turn, transmits an electric signal, commanding the 2-way solenoid valve [S2] to open. The deluge valve's control chamber drains through the pressure reducing pilot [PR]. The FDV Deluge valve opens, admitting water to the spray sprinklers line [SL] at a steady, preset pressure.

RESET POSITION

System reset requires the reset of the electric alarm system to de-energize and close the 2-way solenoid valve. The FDV deluge control chamber pressurizes and the valve closes. In addition, the downstream pipe line need to be drained by operating the Drain valve [MD] manually

Raphael reserves the right to change the contents without notice

Typical installation

FDV - PE1

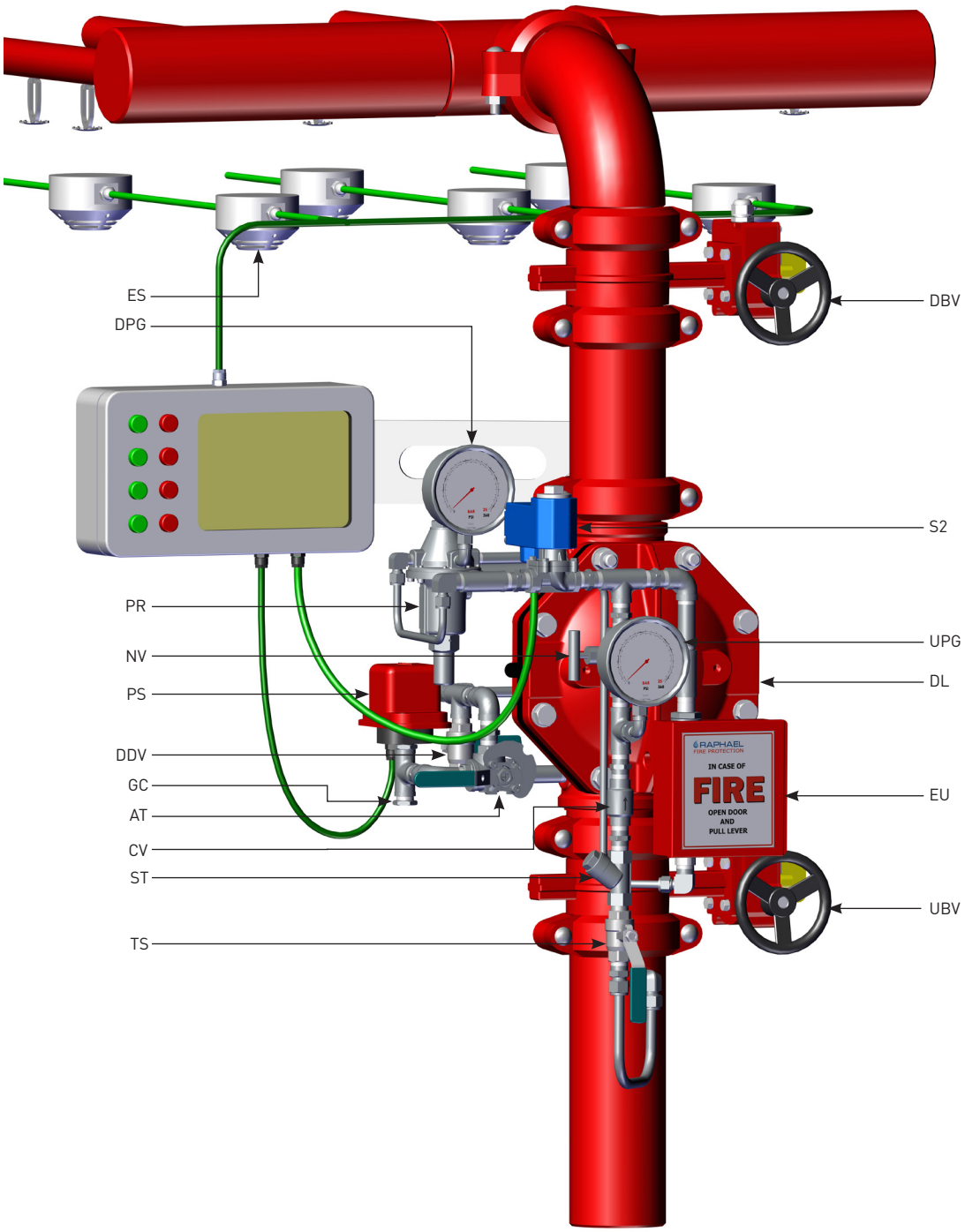

TS - Trim supply valve
ST - "Y" Strainer
CV - Check valve
AT - Alarms Test valve
GC - Gong Connection
DDV - Downstream Drain Valve

PS - Pressure Switch
NV - Needle Valve
PR - PRPV Pressure Reducing pilot
DPG - Downstream Pressure Gauge
ES - Electric Sensors
DBV - Downstream Butterfly Valve

S2 - 2-way Solenoid valve
UPG - Upstream Pressure Gauge
DL - Deluge valve
EU - MEU manual Emergency Unit
UBV - Upstream Butterfly valve

Parametric drawing:

FDV-PE1

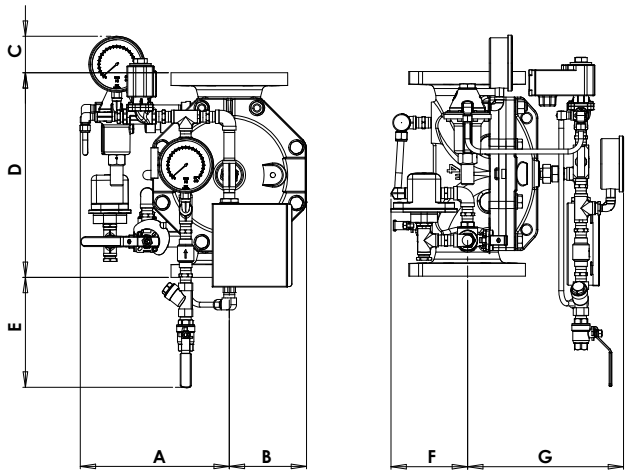

Dimensions Table

Size	1½"		2"		3"		4"		6"		8"		10"	
	mm	inch	mm	inch	mm	inch	mm	inch	mm	inch	mm	inch	mm	inch
A	284	11.2	285	11.2	303	11.9	289	11.3	315	12.4	340	13.4	395	15.5
B	122	4.8	122	4.8	141	5.5	150	5.9	177	6.9	231	9	306	12
C	107	4.2	108	4.2	65	2.5	55	2.1	75	3	79	3.1	46	1.8
D	204	8.0	220	8.6	324	12.7	400	15.7	464	18.2	570	22.4	766	30.1
E	288	11.3	280	11	298	11.7	190	7.4	158	6.2	103	4	N/A	N/A
F	141	5.5	141	5.5	120	4.7	150	5.9	168	6.6	191	7.5	234	9.2
G	275	10.8	288	11.3	254	10	310	12.2	350	13.7	383	15	503	19.8
Kg/lb	13.7	30.2	15.6	34.4	32.4	71.4	47.5	104	59	130	104	230	235	518

Factory Standard

MAIN VALVE

BODY & COVER

- Ductile iron
- Cast Steel WCB
- Stainless Steel CF8
- Stainless Steel CF8M
- Nickel Aluminum Bronze

ELASTOMERS:

- NR, fabric reinforced Natural Rubber
- EPDM, fabric reinforced
- NBR, fabric reinforced Nitrile Rubber

COATING:

- Base layer – high built Epoxy FBE
  Top layer – electrostatic Polyester powder RAL 3000
- Rilsan Polyamide based (Nylon 11)
- Internal – vitreous Enamel
  External – Epoxy/Polyester powder RAL 3000

TRIM

PIPING & TUBING:

- Stainless Steel 316
- Copper/Brass
- Cupro-Nickel
- Monel®

FITTINGS:

- Stainless Steel 316
- Brass
- Super Duplex
- Cupro-Nickel
- Monel®

ACCESSORIES:

- Stainless steel CF8M / 316
- Brass
- Nickel Aluminum Bronze
- SMO-245
- Monel®

PLEASE SPECIFY

- Working Media
- Ambiental conditions
- Min/Max operating flow
- Min/Max operating pressure
- Downstream set pressure
- System installation orientation
- Deluge valve ends and standard
- Deluge valve material and coating
- Trim materials
- Solenoid Voltage
- Solenoid Protection
- Additional accessories needed

For more detailed technical information, please refer to chapter Engineering Data.

Raphael reserves the right to change the contents without notice