Electrically Actuated, Local Reset, Pressure Reducing Deluge Valve

FDV - PE0

The FDV is a fire protection control valve for deluge fire sprinkler systems, designed for installation in hazardous environments.

It is suitable for vertical or horizontal installation and features a globe-pattern, line-pressure-operated design with a direct elastomeric diaphragm seal. The valve contains no balancing spring or internal metallic components in the wetted space. Its hydrodynamic flow path ensures high flow rates with minimal head loss.

The FDV-PE0 is a pressure control Deluge system, actuated electrically and resets locally. However, the system's functional principle remains unchanged:

In fire situation, an electric detection system activates a solenoid valve through a control panel, to open the FDV deluge valve. Once open, the valve reduces the high inlet pressure to a predetermined fixed outlet pressure. The system includes an emergency manual override valve, which bypasses the fire detection system and enables manual activation when needed.

This system reduces upstream pressure to a set downstream value and maintaining it at a steady level. It responds to downstream pressure fluctuations caused by changes in flow demand, ensuring stable output pressure.

The system is equipped with a PSA - a device that manually and locally pressurizes the wet pilot pipeline, automatically stops pressurization in a fire scenario, and compensates for minor leakage-related pressure losses. This system is suitable for open-nozzle water spray pipelines.



MARKETS

Commercial · Industry · Marine

P.O.G. · Storage · Residential · Airport

TECHNICAL DATA

FLUID: Water, Brackish water, Sea water, Foam

SIZE RANGE:
40mm to 250mm (1½'' to 10'')

AVAILABLE CONNECTIONS ENDS:
Flange*Flange, Groove*Groove, Flange*Groove, Groove*Flange, Thread*Thread

PRESSURE NOMINAL:
250 psi (17.2 bar)

REGULATION RATIO: 5:1

SENSITIVITY:
1.45 psi (0.1 Bar)

APPROVALS

ADVANTAGES

- Only three parts: body, diaphragm, and cover plate. No wet metal spring inside the control chamber.
- Full-bore, unobstructed design.
- Simple manual reset to the valve's standby position without draining or opening the valve itself, and without closing the OS &Y or other system valves.
- Maintained in a standby closed position.
- Low maintenance cost: the valve can be serviced in-line and includes only one replaceable part — a long-life elastomeric diaphragm.
- Complies with NFPA 25, the standard for the inspection, testing, and maintenance of water-based fire protection systems.

CHARACTERISTICS

- The hydro-dynamic pattern design ensures high flowrates with minimum head loss.
- The valve trips open automatically upon gradual release of water pressure from its control chamber. The trip is actuated by an electric signal transmitted to the valve's solenoid from the main control panel, triggered by flame heat exposure detected by the sensor system.
- Soft closing, achieved by pressurizing the valve's control chamber using line pressure or an independent water source, prevents pressure surges.
- A pressure-reducing pilot allows full control over the downstream pressure.
-

The FDV-PE0 resets to its standby closed position by de-energizing the alarm system solenoid coil via the main control panel and manually operating the local reset device (PSA).

Schematic drawing:

FDV-PEO

Set position

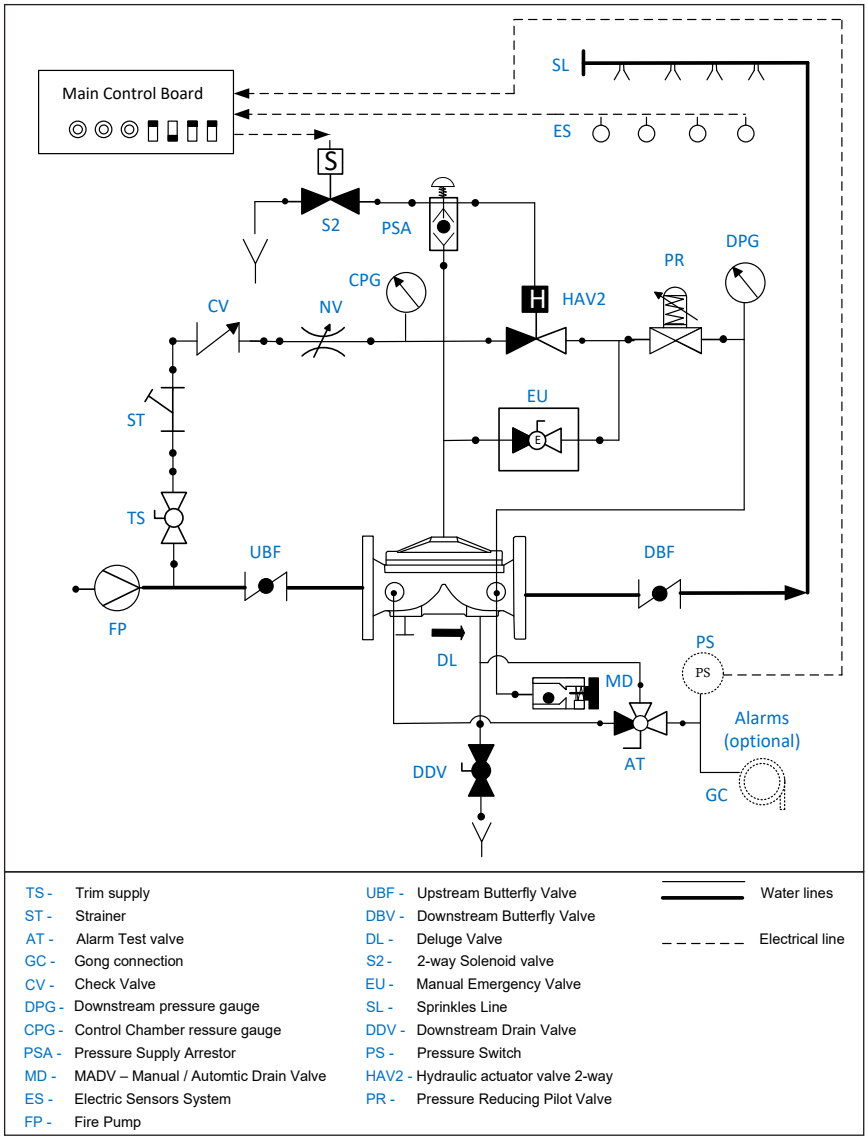

TS -	Trim supply	UBF -	Upstream Butterfly Valve		Water lines
ST -	Strainer	DBV -	Downstream Butterfly Valve		
AT -	Alarm Test valve	DL -	Deluge Valve		Electrical line
GC -	Gong connection	S2 -	2-way Solenoid valve		
CV -	Check Valve	EU -	Manual Emergency Valve		
DPG -	Downstream pressure gauge	SL -	Sprinkles Line		
CPG -	Control Chamber ressure gauge	DDV -	Downstream Drain Valve		
PSA -	Pressure Supply Arrestor	PS -	Pressure Switch		
MD -	MADV – Manual / Automtic Drain Valve	HAV2 -	Hydraulic actuator valve 2-way		
ES -	Electric Sensors System	PR -	Pressure Reducing Pilot Valve		
FP -	Fire Pump				

OPERATION

SET POSITION

Pressurized water in the actuator's (HAV2) control chamber is trapped by the close solenoid and by the closed PSA (PSA).

Pressurized water in the valve's control chamber (DL) is trapped by the closed actuator, the closed PSA (PSA), the check valve (CV) and by the closed emergency valve (EU), maintaining the FDV deluge valve (DL) closed.

FIRE SITUATION

When the electric detection system (ES) senses flame heat, it activates the main control panel, which transmits an electric signal commanding the 2-way solenoid valve (S2) to open and drain the actua-tor's control chamber. Consequently, the actuator (HAV2) opens and drains the Deluge valve through the pressure-reducing pilot (PR). The pilot regulates the downstream pressure and maintains it at a steady set pressure.

RESET POSITION

To reset the system, the electrical alarm system must be reset to de-energize and close the solenoid valve. This action stops the drainage of the actuator's control chamber. The PSA (PSA) push button should then be pressed to allow the upstream pressure to flow through, thereby pressurizing the actuator's control chamber and closing the FDV deluge valve.

Raphael reserves the right to change the contents without notice

Typical installation

FDV - PE0

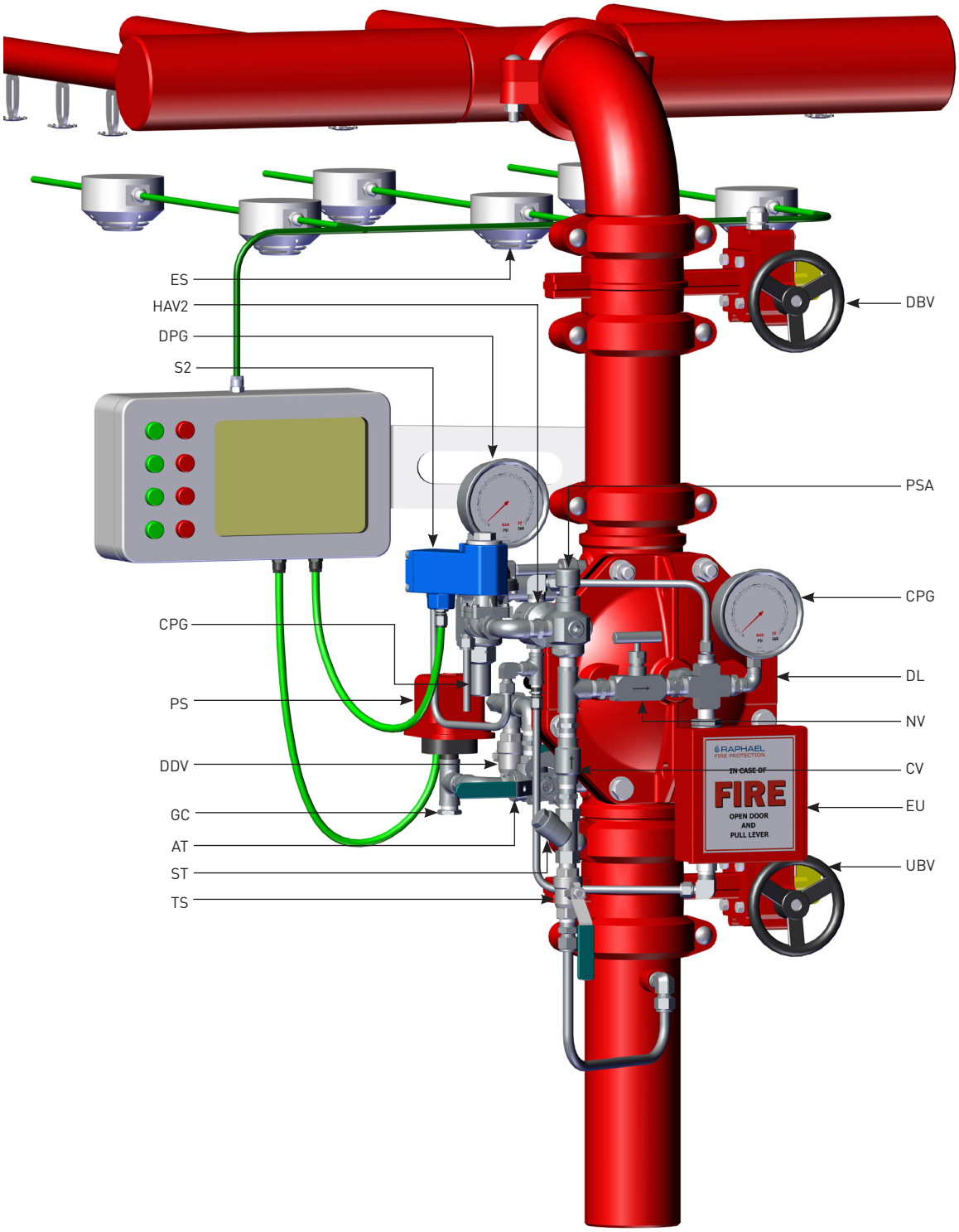

TS – Trim Supply
ST – Strainer
AT – Alarm Test valve
GC – Gong Connection
DDV – Downstream Drain Valve
HAV2 – Hydraulic actuator 2 way
PS – Pressure Switch
OR – Orifice
S2 – 2-way Solenoid
PSA – Pressure Supply Arrestor
MD – Manual Automatic Drain Valve
PR – Pressure Reducing Pilot Valve
ASK – Air Supply Kit
ES – Electric Sensors
DPG – Downstream Pressure Gauge
CPG – Control chamber Pressure Gauge
UBV – Upstream Butterfly Valve
DBV – Downstream Butterfly Valve
DL – Deluge valve

Parametric drawing:

FDV-PEO

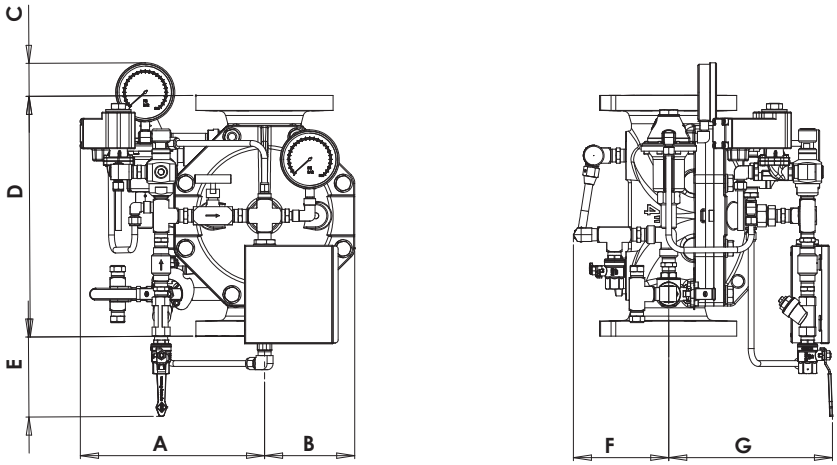

Dimensions Table

Size	1.5"		2"		3"		4"		6"		8"		10"	
	mm	inch	mm	inch	mm	inch	mm	inch	mm	inch	mm	inch	mm	inch
A	260	10.2	267	10.5	297	11.7	290	11.4	315	12.4	340	13.4	395	15.5
B	122	4.8	121	4.7	135	5.3	150	5.9	178	7	232	9.1	305	12
C	103	4	103	4	93	3.6	54	2.1	45	1.77	47	1.8	44	1.7
D	204	8.0	220	8.6	324	12.7	400	15.7	464	18.2	570	22.4	766	30.1
E	230	9	222	8.7	170	6.7	133	5.3	100	3.9	47	1.8	N/A	N/A
F	151	5.9	151	5.9	137	5.4	158	6.2	167	6.6	191	7.5	221	8.7
G	260	10.2	208	8.1	230	9	272	10.7	340	13.3	374	14.7	490	19.3
Kg/lb	14.5	32	15.2	33.5	32.2	70.5	48	106	59	130	104	230	235	518

Factory Standard

MAIN VALVE

BODY & COVER

- Ductile iron
- Cast Steel WCB
- Stainless Steel CF8
- Stainless Steel CF8M
- Nickel Aluminum Bronze

ELASTOMERS:

- NR, fabric reinforced Natural Rubber
- EPDM, fabric reinforced
- NBR, fabric reinforced Nitrile Rubber

COATING:

- Base layer – high built Epoxy FBE
  Top layer – electrostatic Polyester powder RAL 3000
- Rilsan Polyamide based (Nylon 11)
- Internal – vitreous Enamel
  External – Epoxy/Polyester powder RAL 3000

TRIM

PIPING & TUBING:

- Stainless Steel 316
- Copper/Brass
- Cupro-Nickel
- Monel®

FITTINGS:

- Stainless Steel 316
- Brass
- Super Duplex
- Cupro-Nickel
- Monel®

ACCESSORIES:

- Stainless steel CF8M / 316
- Brass
- Nickel Aluminum Bronze
- SMO-245
- Monel®

PLEASE SPECIFY

- Working Media
- Ambiental conditions
- Min/Max operating flow
- Min/Max operating pressure
- Downstream set pressure
- System installation orientation
- Deluge valve ends and standard
- Deluge valve material and coating
- Trim materials
- Solenoid Voltage
- Solenoid Protection
- Installation orientation
- Additional accessories needed
  Alarm pressure switch
  Gong

For more detailed technical information, please refer to chapter Engineering Data.

Raphael reserves the right to change the contents without notice