IOM FDV-PC1

ELECTRO-PNEUMATICALLY ACTUATED, REMOTE RESET, MODULATING DELUGE VALVE

Installation Operation & Maintenance manual

Fire Protection

RAPHAEL FP

RAPHAEL VALVES INDUSTRIES

IOM FDV-PC1

Electro-Pneumatically Actuated, Remote Reset, Modulating Deluge Valve

DESCRIPTION



This deluge system is based on Raphael's FDV valve and is equipped with pneumatically actuated control trim. The installed FDV valve can be supplied with a range of optional materials and coatings to meet the required operating conditions, but the system's functional principle remains unchanged: in fire situations, a pneumatic and/or electric detection system trips the valve's control trim, releasing the pressurized water trapped in the FDV's control chamber, and the valve opens.

This system is capable of reducing upstream pressure to a set downstream value and maintaining it at a steady level. It responds to downstream-pressure changes caused by variations in flow demand and keeps the set pressure stable. The system is suitable for water-spray pipelines with open sprinklers.

RAPHAEL FP

INSTALLATION PARS LIST

Electro-Pneumatically Actuated, Remote Reset, Modulating Deluge Valve

1. Solenoid valve (3 way)
2. Alarm pressure Switch (optional)
3. Check Valve
4. Alarms Test Valve (3 way)
5. “Y” Strainer
6. Trim Pressure Supply Valve
7. MEU Manual Emergence Unit
8. PRPV Pressure Reducing Pilot Valve
9. Downstream pressure gauge
10. Needle Valve
11. Control chamber pressure gauge
12. PAV-2 Pneumatic actuator
13. Relief port (temporarily plugged) 1/4" NPT female
14. Supply port from ASK connection (temporarily plugged) 1/4" NPT female
15. Dry pilot connection port (temporarily plugged) 1/4" NPT female
16. MADV – manual automatic drain valve
17. Downstream drain valve (1/2" NPT female)
18. Water motor alarm conn. (1/2" NPT female - plugged)
19. Upstream drain port (plugged)

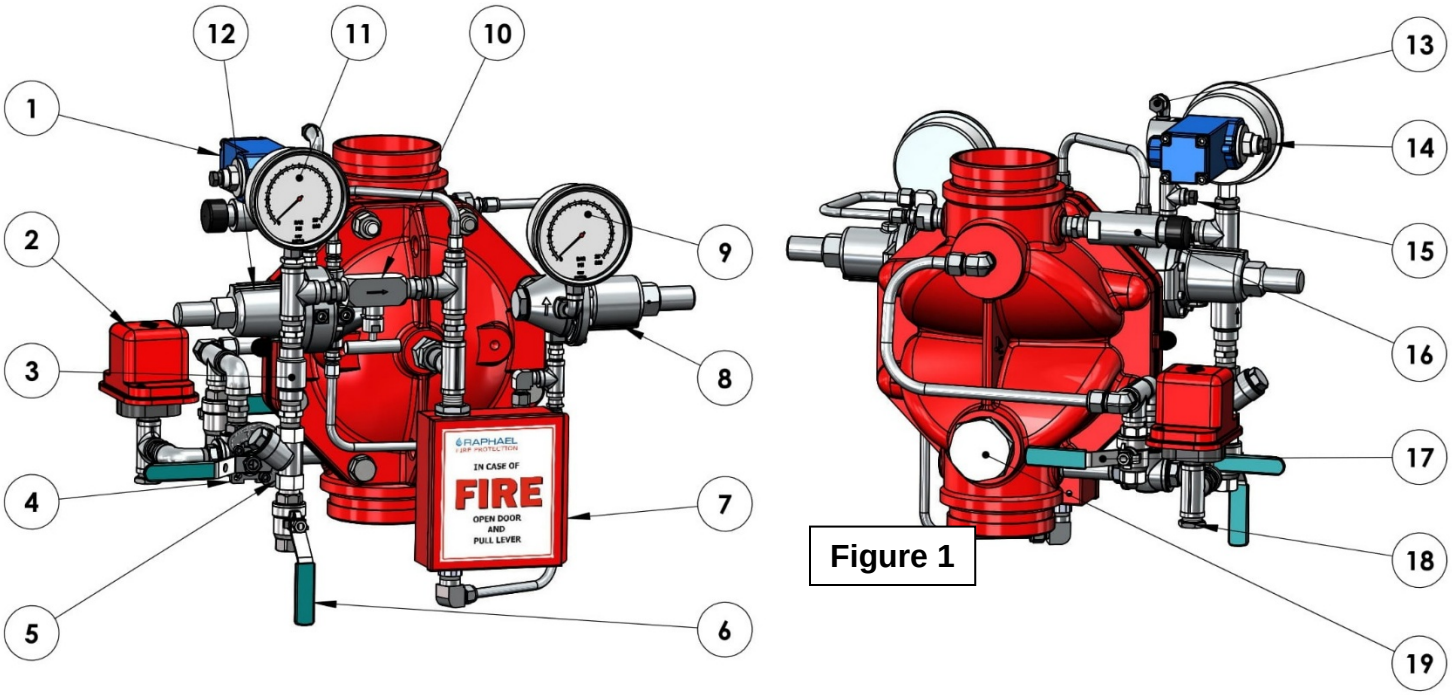

Figure 1

OPERATION (Reference Figure 1)

SET position:

Water is supplied by the trim pressure supply valve (**6**), passes the "Y" strainer (**5**), the check valve (**3**) flows through the needle valve (**10**) and fills the FDV's control chamber.

Pressurized water in the FDV valve's control chamber get trapped by closed PAV-2 actuator (**12**) the check-valve (**3**), and by the closed emergency valve MEU (**7**), maintaining the deluge valve in closed position. The PAV-2 actuator's sense-chamber is subjected to constant pneumatic pressure in the dry pilot line, through the N.O. solenoid valve, keeps the actuator in its CLOSE state and by that, blocks the FDV's drainage.

FIRE Situation

When one or more of the dry pilot line automatic sprinklers is subjected to fire, it blows open and the pneumatic pressure vents to the atmosphere.

When its sense-chamber gets de-pressurized, the PAV-2 (**12**) moves to its OPEN state and drains the FDV's control chamber through the PRPV pilot (**8**) to the FDV valves downstream. Consequently, the FDV deluge valve opens and admits water at reduced set pressure into the open spray nozzles pipeline/s.

Alternately, if a heat / smoke detector senses flames heat, it transmits an electric signal to the main control board that in turn, transmits a signal to the solenoid valve (**1**). Its coil energizes change its state. Consequently, it vents the PAV-2 actuator's sense chamber pneumatic pressure and simultaneously, isolate it from the dry pilot's pressure. The PAV-2 (**12**) moves to its OPEN state and drains the FDV's control chamber through the PRPV pilot (**8**) to the FDV valves' downstream. Consequently, the FDV deluge valve opens, and admits water at set reduced pressure into the open spray nozzles pipeline/s.

RESET Position

Flow the procedure described at chapter **Commissioning the system - phase 3** page 7

INSTALLATION (Reference Figure 2)

1. This system is supplied pre-assembled and factory pre-adjusted. Any change carried out at the system's trim components order, pipes and tubes length or ports for axillary connection sizes, will affect the system operation and therefore, prohibited.

2. The system cannot be installed at a location where it might be subjected to freezing temperatures.

3. maintaining sufficient room around the system location ensures operational safety, and ease of maintenance.

4. It should be considered that water will be drained during regular maintenance on a routine basis, during periodical tests procedures and when operating in fire situation. Therefore, a drainage plan should be considered.

5. The system described is to be mounted vertically only. Systems with identical operation but for horizontal installation are marked with a prefix "H", e.g. HFDV-PC1.

6. The downstream pipe connected to the FDV valve at a vertical and horizontal mount system must be supported firmly to prevent the pipeline's weight loaded on the system's valve.

7. Any use of pipe/thread reduction-fittings installed at open ports designated for axillary components, (like water motor alarm, trim pressure supply, FDV valve's drains), is prohibited.

8. All connections to water and air supply, should be done in accordance with figure 2
   (**1**) – Trim pressure supply connection - ½" NPT female.
   (**6**) - Alarm gong - ½" NPT female.
   (**11**) – Dry pilot connection & air supply from ASK (1/4" NPT female, temporary plugged)
   (**9**) – PAV-2 air vent. Temporarily plugged elbow. (1/4" NPT, female)

9. The FDV valve should be installed with the flow arrow marked on the valve's body, in the proper direction.

10. Before performing the high-pressure leak test, make sure that the butterfly valve or the OS&Y valve upstream of the deluge valve is closed, in order to prevent damage to the diaphragms in the valve and in the trim components.

11. Make sure that the gong connected to its designated outlet is supported so that its weight, along with the weight of the piping attached to it, is not applied to the valve trim.

12. Before performing the high-pressure leak test, make sure that the butterfly valve or the OS&Y valve upstream of the deluge valve is closed, in order to prevent damage to the diaphragms in the valve and in the trim components.

13. Make sure that the gong connected to its designated outlet is supported so that its weight, along with the weight of the piping attached to it, is not applied to the valve trim.

INSTALLATION PARTS LIST (Reference Figure 2)

Electro-Pneumatically Actuated, Remote Reset, Modulating Deluge Valve

1. Trim supply valve (1/2" NPT female)
2. Y Strainer
3. Alarms test valve (3 way)
4. Needle valve bypass ball valve at the ASK
5. Air supply ball valve at the ASK
6. Water Motor Alarm connection (1/2" NPT female, plugged)
7. Alarm Pressure switch*****. (½" NPT female connection) *
8. Downstream drain valve
9. PAV-2 Pneumatic Actuator Valve 2 way.
10. Main Control hub
11. Solenoid valve, 3-way, ¼" NPT.
12. Heat / Smoke detection sensors.
13. Dry pilot line
14. Downstream separation valve (butterfly or OS&Y valves).
15. Upstream pressure gauge
16. Downstream pressure gauge
17. PRPV Pressure Reducing Pilot Valve
18. Needle valve
19. MEU Manual Emergency Unit
20. Upstream separation valve (butterfly or OS&Y valves).

*** Optional**

RAPHAEL FP

Electro-Pneumatically Actuated, Remote Reset, Modulating Deluge Valve

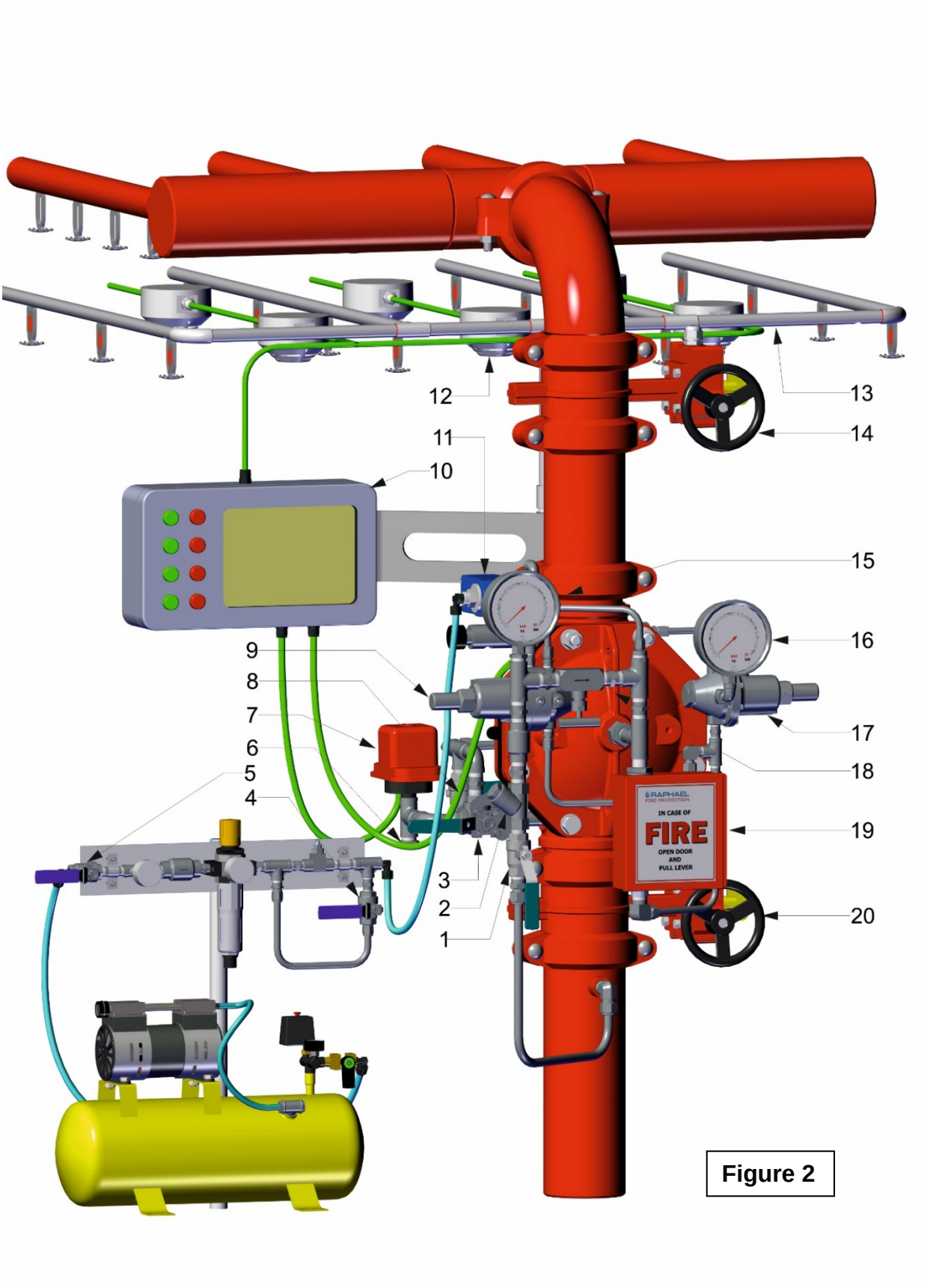

Figure 2

RAPHAEL FP

OPERATING INSTRUCTIONS (Reference Drawing - figure 2)

Commissioning the system - Phase 1

Filling and pressurizing the system.

The procedure described should be carried out after system installation completion and a comprehensive inspection.
(Reference Drawing - figure 2)

1. The filling process needs to be performed only after flushing the pipeline. The flushing needs to be done when both butterfly valves (**20** & **14**) are open, and the trim supply valve (**1**) is close.
2. After flushing, close the upstream butterfly valve (**20**).
3. Make sure the trim pressure supply ball valve (**1**) is closed.
4. Make sure that the Emergency valve in the MEU (**18**) is fully closed.
5. Open ASK air supply ball valve (**5**) and the needle valve bypass ball valve (**4**). Pressurize the dry pilot line to the rated set pressure. No adjustments at the PAV-2 (**9**) actuator are needed as the device is factory set. When reached to set pressure, close the needle and the bypass ball valve (**4**).
6. Close downstream separation butterfly valve (**14**) and open the FDV's downstream drain valve (**8**). The Upstream drain remains plugged, or its valve (if equipped) is close.
7. Open the trim pressure supply valve (**1**) and fill the trim and FDV's control chamber.
8. Open gradually the upstream butterfly valve (**20**).
9. Observe the downstream drain valve (**8**): there should be no leakage or dripping. Leave this ball valve open

The system is ready for the "fire situation simulation".

RAPHAEL FP

Commissioning the system - phase 1

Filling and pressurizing the system (Reference Drawing - figure 2)

The procedure described should be carried out after system installation completion and a comprehensive inspection. (Reference Drawing - figure 2)

1. The filling process needs to be performed only after flushing the pipeline. The flushing needs to be done when both butterfly valves (**14** & **20**) are open, and the trim supply valve (**1**) is close.

2. After flushing, close the upstream butterfly valve (**20**).

3. Make sure the trim pressure supply ball valve (**1**) is closed.

4. Make sure that the Emergency valve in the MEU (**19**) is fully closed.

5. Open ASK air supply ball valve (**5**) and the needle valve bypass ball valve (**4**) and pressurize the dry pilot line to the rated set pressure. No adjustments to the PAV-2 (**9**) actuator are needed as the device is factory set. When reached to set pressure, close the needle bypass ball valve (**4**).

6. Close downstream separation butterfly valve (**14**) and open the FDV's downstream drain valve (**8**). The Upstream drain remains plugged, or its valve (if equipped) is close.

7. Open the trim pressure supply valve (**1**) and fill the trim and FDV's control chamber.

8. Open gradually the upstream butterfly valve (**20**).

9. Observe the downstream drain valve (**8**): there should be no leakage or dripping. Leave this ball valve open

The system is ready for the "fire situation simulation".

RAPHAEL FP

Commissioning the system - phase 2

Fire Situation Simulation

The procedure described should be carried out after the system was pressurized and a comprehensive leakage inspection was commissioned.

Energizing the solenoid can simulate a fire situation and cause the system to response by opening the FDV deluge valve.

NOTICE:
Prior to any stoppage of the fire protection system, a fire patrol should be placed in the area covered by the interrupted system.
Prior to generating any test procedures, turning on false alarms or turning off the alarm system, the local safety personnel and the close central fire station must be reported. (Reference drawing - figure 2)

1. Make sure the downstream separation valve (**14**) is close

2. Make sure that the downstream drain valve (**8**) is open.

3. **Actuated by the dry pilot line**: Open the inspector's valve (at the end of the dry pilot line – not illustrated) and vent the pilot line. The pilot's pressure drop will cause the PAV-2 (**9**) actuator to open and consequently, the FDV deluge valve will open.

4. **Downstream set pressure adjustment**: Observe the pressure gauge installed on the PRPV pilot valve (**17**). Downstream set pressure correction if needed, need to be performed following this method -
   ***** Release the small hexagon M4 socket screw located at the adjusting screw cover about two turns using 2mm Allen key and fully unscrew the cover.
   ***** Unscrew the locking nut on the pilot's adjusting screw about two turns using a 17mm (11/16") wrench.
   ***** Use a 10mm wrench for the adjusting screw following the procedure below:
   - to increase the pressure – turn the pilot's adjusting screw clockwise
   - to decrease the pressure – turn the pilot's adjusting screw anticlockwise
   after adjustment completion, tighten the locking nut (while holding the adjusting screw in place). Re-install the cover and tighten the M4 screw lock screw.

5. If downstream pressure is ok, close partly and gradually the downstream drain valve (**8**). Observe the downstream pressure gauge and make sure that the PRPV pilot

keeps set pressure steady.

6. Close the inspector's valve at the end of dry pilot line (**13**) and wait until the line gets pressurized to air set pressure. The process can be expedited by temporarily opening the needle valve bypass ball valve (**4**) at the ASK (Air Supply Kit). When reached to set pressure, the FDV deluge valve needs to close.

7. **Actuated by the Heat/Smoke detection sensors**: initiate a false alarm for the Heat/Smoke detection sensors at the control board (**10**). The solenoid valve (**11**) will become energized, and the pressurized air in the PAV-2 control chamber will be vented through the PAV-2 vent port, to the atmosphere.

8. Consequently, the FDV valve will open, and a significant stream of water should flow out of the downstream drain valve (**8**).

The system is ready for re-setting and placing in service.

RAPHAEL FP

Commissioning the system - phase 3.

Resetting & placing in service (Reference Drawing - figure 2)

The procedure described should be carried out after any periodic operational test - simulated or real fire situation. After a real fire situation, replace all blown-open sprinklers before pressurizing the pilot line.

Resetting after a Fire Situation Simulation:

1. Close the Upstream Butterfly valve (**20**)
2. Close the trim pressure supply (**1**).
3. Close the inspector's valve (at the end of dry pilot line **13**) and / or turn off the false alarm for the Heat/Smoke detection sensors at the main control board.
   Make sure the dry pilot line becomes pressurized to set pressure. The process can be expedited by temporarily opening the needle valve bypass ball valve (**4**) at the ASK.
4. Disassemble the "Y" strainer (**2**) and clean its screen. Re-assemble the strainer.
5. Open the pressure supply valve (**1**).
6. Open the Upstream Butterfly valve (**20**) and observe the downstream drain valve - make sure there is no leakage or dripping. If ok, close this valve.
7. Close the downstream butterfly valve (**14**)

Resetting after a Real Fire Situation:

1. Close the Upstream Butterfly valve (**20**)
2. Close the trim pressure supply (**1**).
3. Close the air supply ball valve at the ASK (**5**)
4. All the Dry pilot line's blown-open sprinklers must be replaced. When done. Open the air supply ball valve (**5**) and needle ball valve bypass valve (**4**). Make sure the dry pilot line becomes pressurized to set pressure. The process can be expedited by temporarily opening the needle valve bypass ball valve (**4**) at the ASK. When reached to air set pressure, close ball valve (**4**).
5. Follow steps 5 to 7 listed above under ***Resetting after a Fire Situation Simulation instruction.***

The system is in SET state and placed in service.

RAPHAEL FP

MAINTENANCE (Reference Figure 2)

Prior to any stoppage of the fire protection system, a fire patrol should be placed in the area covered by the interrupted system.
Prior to generating any test procedures, turning on false alarms or turning off the alarm system, the local safety personnel and the close central fire station must be notified.

The Maintenance and inspection procedures are based on the relevant chapters at NFPA 25.

Daily Inspection

Make sure that the deluge valve's heating system (If equipped), functions correctly and that the Fire protection valve surrounding temperature is 4°C min.

Monthly Inspection

1. Observe the FDV deluge valve and its trim for external damage: observe the trim piping and hose connections for leakage or damage.

2. Verify that the upstream and downstream separation butterfly valves (**20** & **14**) and the Trim pressure supply valves (**1**) are in fully open position.
   Downstream drain valve (**8**) and upstream drain valve (if equipped) are fully close.

3. Observe the dry pilot pipeline pressure gauge for set pressure.

4. Make sure that the required supply water pressure is applied to the deluge Valve inlet and trim.

5. Push the MADV (MB) (**20 figure 1**) and make sure that after emptying condensing water, the drain flow/dripping stops. If a constant leakage is observed, it might indicate a deluge valve sealing problem.

6. Move the 3-way SET/TEST valve handle (**3**) to TEST. The acoustic alarm should sound, and the alarm pressure switch (**7**) should transmit a signal to the main control board. If ok, move the valve's handle to the SET state.

Annual test procedure

1. Conduct the monthly test & inspection procedure.
2. Perform the procedure described in chapter - **Commissioning the system - phase 2. -** Fire Situation Simulation. Check the system's proper operation.
3. Follow the procedure described in chapter - **Commissioning the system - phase 3.** - Resetting & placing in service, chapter ***Resetting after a Fire Situation Simulation.***

Every 5 years inspection procedure

This major inspection and maintenance procedure includes the removal of the trim, the dismantling of the FDV's valve cover and the performance of a comprehensive internal part examination. Then, the relevant trim accessories should be replaced. After completion, the Annual maintenance procedure is to be conducted.

1. Close the upstream butterfly valve (**20**) and the trim pressure supply valve (**1**).
2. Open the drain valve (**8**) and the upstream drain valve if equipped. Drain the FDV's control chamber using the MEU Emergency valve (**19**).
3. Turn off or disconnect all relevant electrical circuits.
4. Release all relevant tubes, fitting nuts and the central union pipe connection (if equipped) at valves cover center.
5. disassemble and remove the front trim.
6. Remove all the FDV's cover bolts. The cover will hang on its studs (4" DN100 valve size and up). Release both nuts and remove the cover carefully.
7. Observer the internals of the valve and cover for excessive scale residuals, foreign particles, damaged coating (rust, cracks, or pealing).
8. Worn or damaged parts should be replaced. Consult Raphael's local representative or the service department for any maintenance issue or part replacement issue.

9. Replace the Diaphragm. The identification tongue should point to the valve's stamped size side (from top view – at the left side).

10. Reinstall the valve's cover: use the Anti-seize paste supplied in the maintenance kit for bolts and nuts pre-installation lubrication. Tight it in accordance with **"Bolt's torque moments table".**

11. Reinstall the front trim carefully: avoid causing twists or dents on bent tubes and do not overtight the compression fitting's nuts.

12. When the system is fully re-assembled, perform the "**Commissioning the system - phase 1** - Filling and pressurizing the system" procedure.

13. Perform the **Annual test procedure.**

Bolt's Torque Moments Table

Valve size	1.5"	2"	2.5"	3"	4"	6"	8"	10"
Torque lb/ft	22	29	36	54	65	72	87	118

Equivalent pipe length for FDV deluge valves

Valve size		1.5"	2"	2.5"	3"	4"	6"	8"	10"
Equivalent length value	ft	11	24	25	28	31	46	72	117
	m	3.6	7.3	7.6	8.5	9.4	14	21.9	35.6

RAPHAEL FP

MARKING

The FDV valves are marked by a laser engraved, black anodized, 0.8mm (0.031”) thick metal plate, riveted to the valve’s cover.

- *Company name and trademark.*
- *Short description (Italic letters)*
- *Application’s type*: FDV-PC1 – Electric / Pneumatic actuated, Remote Reset with Pressure Reducing.
- (P/N) *The Application’s part number*: System properties–Valve properties
- *Rated pressure*: 250 psi
- *Equivalent Length: reference table - page 13.*
- *Serial Number*: Work order number-MM-YY-Number in batch 01-99
- *The UL listing mark & QR code:* EXxxxxx
- *The FM approved mark.*
- *The Application’s* diameter in inch: XX”

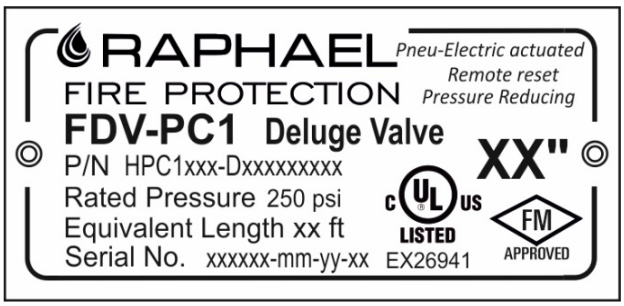

RAPHAEL FP

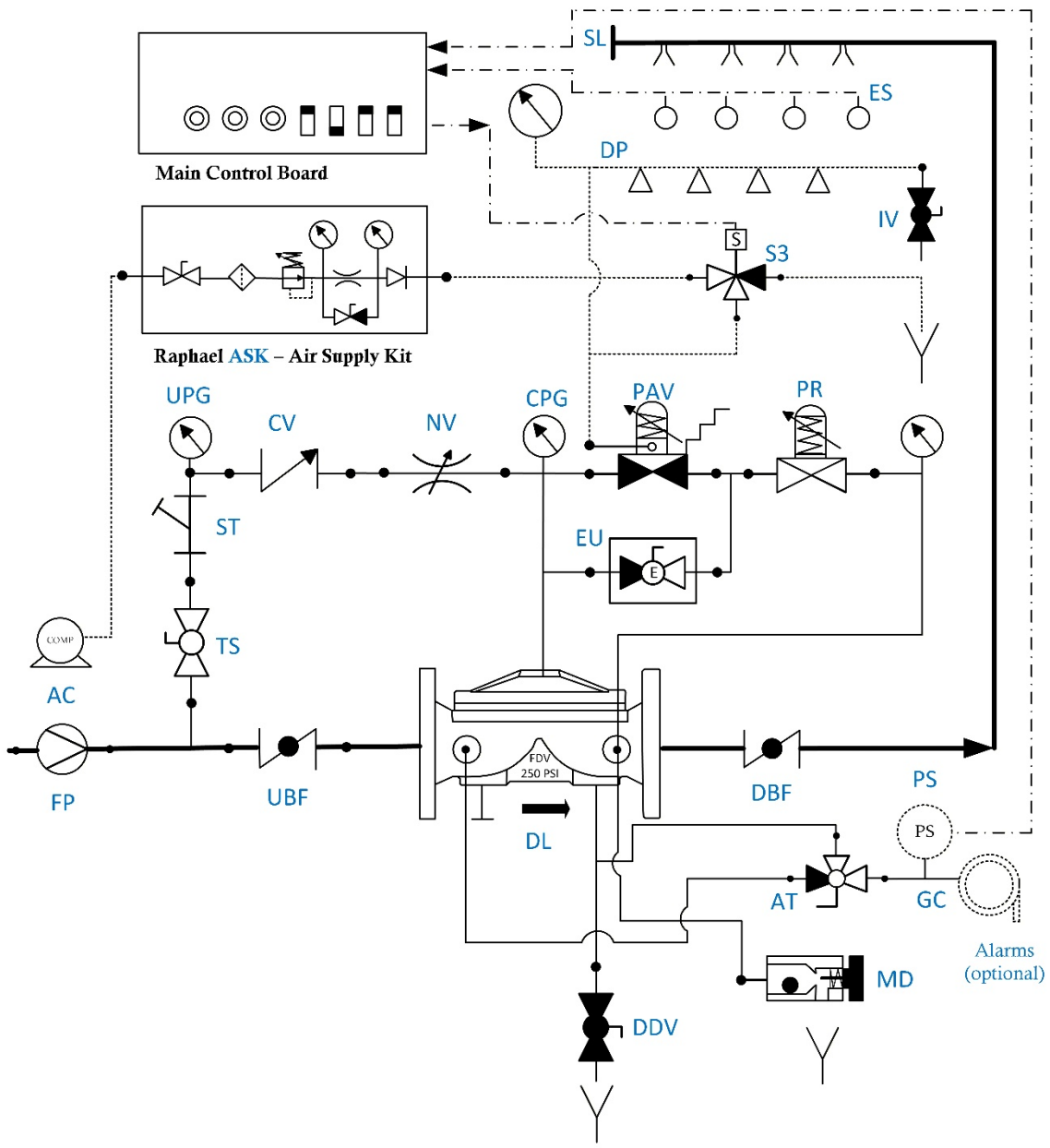

TS -	Trim supply	UBV -	Upstream Butterfly Valve		Water lines
ST -	Strainer	DBV -	Downstream Butterfly Valve		
AT -	Alarm Test valve	PS -	Pressure Switch		Air line
GC -	Gong connection (optional)	S3 -	3-Way Solenoid valve		Electric wire
PR -	PRPV – Pressure Reducing Pilot Valve	AC -	Air Compressor		
UPG -	Upstream Pressure Gauge	EU -	Manual Emergency Valve	CV -	Check Valve
CPG -	Control Chamber P. gauge	SL -	Sprinkles Line	NV -	Needle Valve
ES -	Electric Sensors system	DDV -	Downstream Drain Valve	ASK -	Air Supply Kit
MD -	MADV – Manual / Automtic Drain Valve	FP -	Fire Pump	IV -	Inspector's Valve
PAV -	Pneumatic Actuator valve	DP -	Dry Pilot line	DL -	Deluge Valve

RAPHAEL, founded in 1949, is the first Israeli manufacturer of water control valves. RAPHAEL´s research department constantly strives to introduce new and innovative products and solutions for water control systems including water works, fire-protection and irrigation systems.



RAPHAEL

RAPHAEL Valves Industries (1975) Ltd.

North Industrial Zone Or Akiva, 3063927 P.O.Box 555, Israel

Tel. +972 4 6263555 | info@raphael-valves.com | raphael-valves.com

Dec-25