# Electro-Pneumatically Actuated, Remote Reset, Pressure Reducing Deluge Valve

# FDV - PC1

The FDV-PC1 fire protection system is based on Raphael's FDV deluge valve and incorporates a control trim that can be actuated both pneumatically and electrically. The FDV valve is available in a wide range of materials and coatings, making it suitable for installation in hazardous environments.

The FDV-PC1 deluge system is primarily pneumatically actuated and can be reset locally. In the event of a fire, heat exposure along the pneumatic dry pilot detection line causes one or more automatic sprinklers to shatter, releasing air pressure from the actuator and initiating the opening of the deluge valve. Alternatively, activation of an electric detection sensor signals the main control board to energize a solenoid valve, which vents the dry pilot line and consequently opens the deluge valve.

The system is capable of reducing upstream pressure to a preset downstream pressure and maintaining it at a constant level. It automatically compensates for downstream pressure fluctuations resulting from changes in flow demand, thereby ensuring stable and reliable performance.

The deluge system is equipped with an emergency manual valve that allows operation independent of the fire detection systems. It is suitable for configurations that combine automatic sprinklers on the dry pilot line with open nozzles on the main spray lines.




## MARKETS

Commercial · Industry · Marine · P.O.G. · Storage · Residential · Airport

## TECHNICAL DATA

**FLUID:** Water, Brackish water, Sea water, Foam

**PNEUMATICS**: Air, Nitrogen

**SIZE RANGE:**
40 mm to 250 mm (1½'' to 10")

**AVAILABLE CONNECTIONS ENDS:**
Flange*Flange, Groove*Groove, Flange*Groove, Groove*Flange, Thread*Thread

**PRESSURE NOMINAL:**
250 psi (17.2 bar)

**REGULATION RATIO**: 5:1

**SENSITIVITY**: 1.45 psi (0.1 Bar)

## APPROVALS

## ADVANTAGES

- Only three parts: body, diaphragm, and cover plate. No wet metal spring inside the control chamber.
- Full-bore, unobstructed design.
- Simple manual reset to the valve's standby position without draining or opening the valve itself, and without closing the OS &Y or other system valves.
- Maintained in a standby closed position.
- Low maintenance cost: the valve can be serviced in-line and includes only one replaceable part — a long-life elastomeric diaphragm.
- Complies with NFPA 25, the standard for the inspection, testing, and maintenance of water-based fire protection systems.

## CHARACTERISTICS

- The hydrodynamic flow pattern design ensures high flow rates with minimal head loss.
- The valve opens automatically following a controlled release of water pressure from its control chamber. Actuation is achieved either by an electrical signal to the valve solenoid or by pneumatic pressure release from the Dry Pilot Line due to exposure to fire heat.
- Soft closing occurs when the valve control chamber is pressurized, either by line pressure or by an independent water source, thereby preventing pressure surges.
- A pressure-reducing pilot valve provides full control of downstream pressure and maintains a stable setpoint over a wide inlet pressure range.

The FDV-PC1 is reset to the closed standby position by de-energizing the alarm system solenoid coil via the main control panel and by repressurizing the Dry Pilot Line.

## Schematic drawing:

FDV-PC1

### Set position

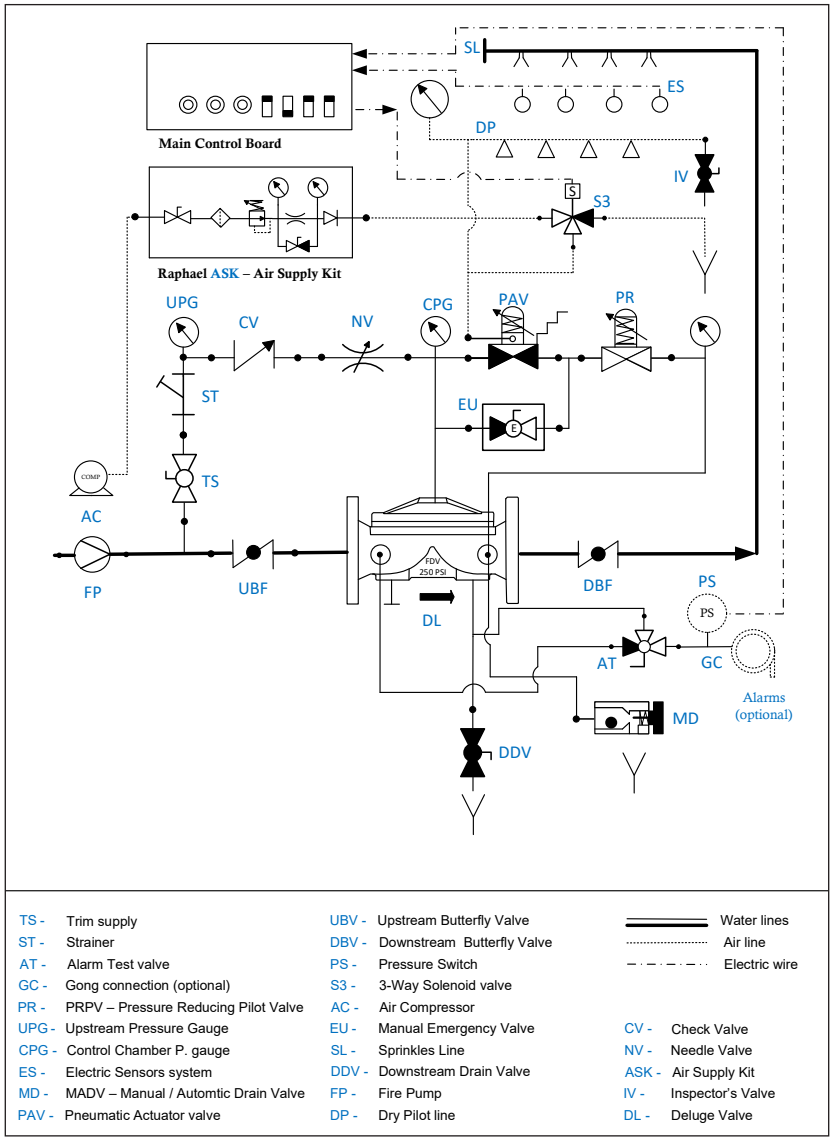


| | | | | | |
|---|---|---|---|---|---|
| TS - | Trim supply | UBV - | Upstream Butterfly Valve | | Water lines |
| ST - | Strainer | DBV - | Downstream Butterfly Valve | | Air line |
| AT - | Alarm Test valve | PS - | Pressure Switch | | Electric wire |
| GC - | Gong connection (optional) | S3 - | 3-Way Solenoid valve | | |
| PR - | PRPV – Pressure Reducing Pilot Valve | AC - | Air Compressor | | |
| UPG - | Upstream Pressure Gauge | EU - | Manual Emergency Valve | CV - | Check Valve |
| CPG - | Control Chamber P. gauge | SL - | Sprinkles Line | NV - | Needle Valve |
| ES - | Electric Sensors system | DDV - | Downstream Drain Valve | ASK - | Air Supply Kit |
| MD - | MADV – Manual / Automtic Drain Valve | FP - | Fire Pump | IV - | Inspector's Valve |
| PAV - | Pneumatic Actuator valve | DP - | Dry Pilot line | DL - | Deluge Valve |

# OPERATION

### SET POSITION

Pressurized water in the valve control chamber (DL) is retained by the closed pneumatic actuator (PAV), the closed emergency valve (EU), and the check valve (CV), thereby maintaining the deluge valve in the closed standby position.

### FIRE SITUATION

When one or more automatic fire sprinklers installed on the Dry Pilot (DP) detection line are exposed to a predetermined temperature and operate, the pilot line depressurizes, causing the pneumatic actuator (PAV) to open.

Alternatively, an electric detection system may sense heat and activate the main control board, which energizes the three-way solenoid valve (S3). The solenoid valve bypasses the Dry Pilot detection line, vents the pneumatic actuator (PAV) control chamber to atmosphere, and opens it. As a result, the FDV-PC0 control chamber is drained through the pressure-reducing pilot valve (PR), causing the deluge valve to open and supply water to the spray sprinkler line at a steady, preset pressure.

### RESET POSITION

To initiate a system reset, all operated fire sprinklers on the Dry Pilot detection line must be replaced and the line repressurized.

In addition, the electrical alarm system must be reset and the solenoid valve de-energized. Consequently, the pneumatic actuator is repressurized and the FDV deluge valve returns to the closed standby position.



Raphael reserves the right to change the contents without notice

## Typical installation

# FDV - PC1

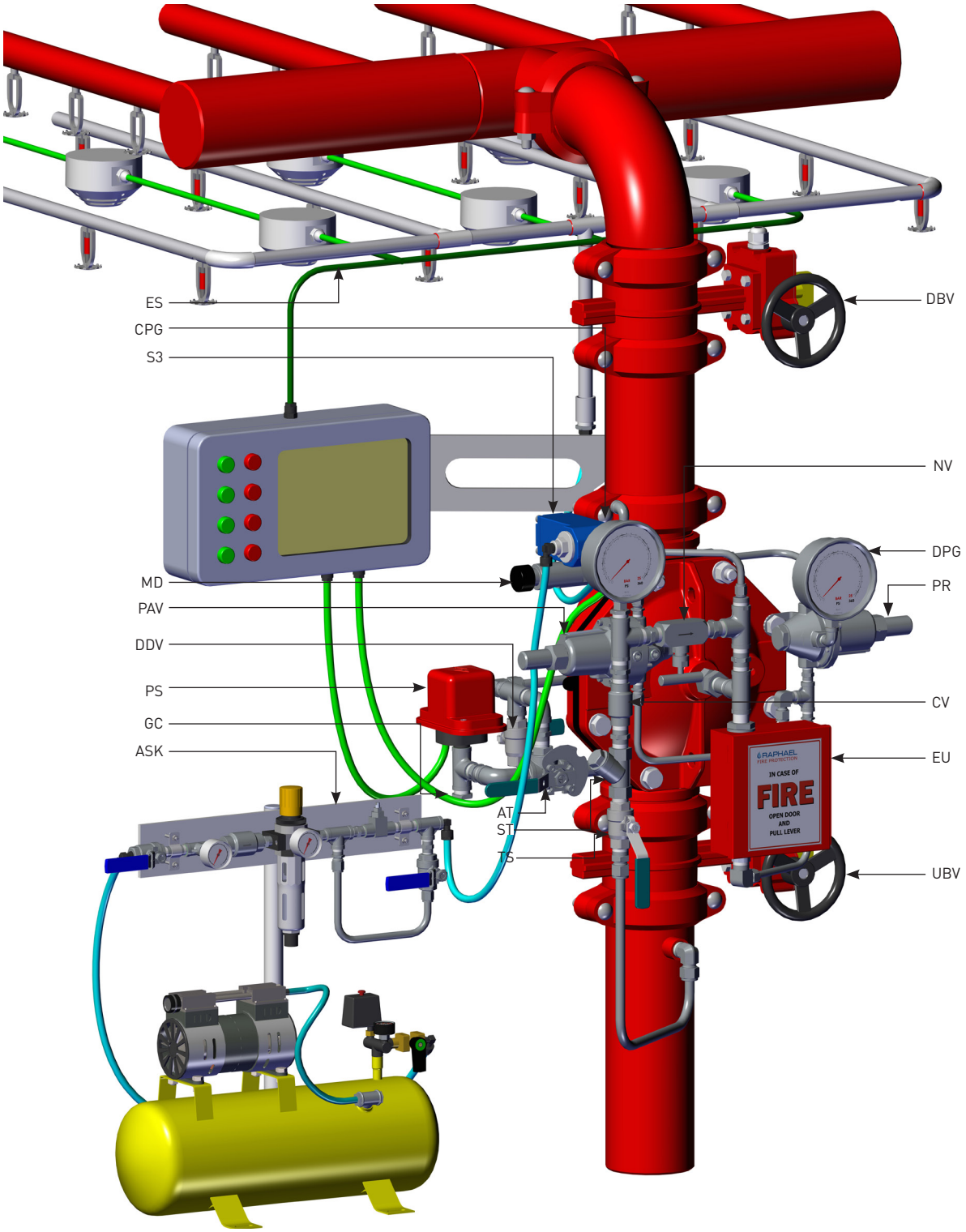


**TS** - Trim supply valve
**ST** - "Y" Strainer
**AT** - Alarms test valve
**NV** - Needle valve bypass
**GC** - Gong connection
**PG** - Pressure switch
**S3** - 3-way Solenoid valve

**PR** - PRPV Pressure Reducing Pilot Valve
**CV** - Check Valve
**ASK** - Air Supply Kit
**DDV** - Downstream drain valve
**PAV** - PAV-2 Pneumatic Actuator
**ES** - Electric Sensors

**DPL** - Dry Pilot Line
**NV** - Needle Valve
**CPG** - Control Chamber pressure Gauge
**DPG** - Downstream Pressure Gauge
**EU** - MEU manual Emergency Unit
**UBV** - Upstream Butterfly Valve
**DBV** - Downstream Butterfly Valve

## Parametric drawing:

FDV-PC1

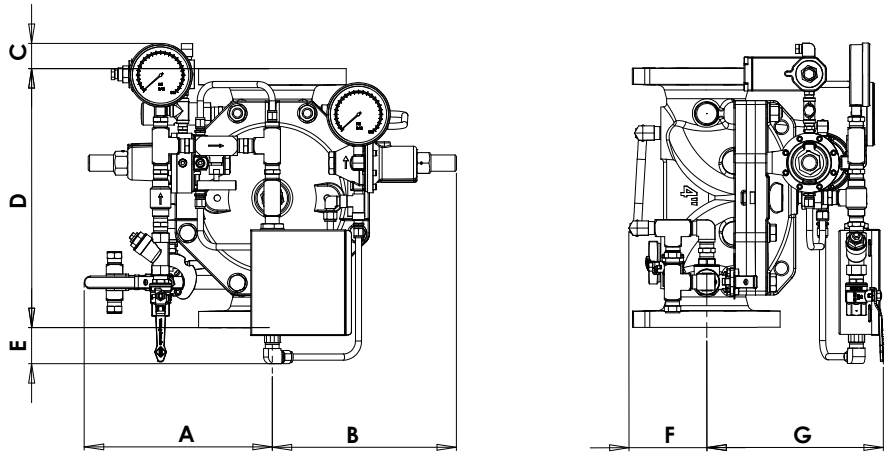


## Dimensions Table

| Size | 1½" | | 2" | | 3" | | 4" | | 6" | | 8" | | 10" | |
|---|---|---|---|---|---|---|---|---|---|---|---|---|---|---|
| | mm | inch | mm | inch | mm | inch | mm | inch | mm | inch | mm | inch | mm | inch |
| **A** | 255 | 10 | 261 | 10.2 | 296 | 11.6 | 290 | 11.4 | 313 | 12.3 | 338 | 13.3 | 372 | 14.6 |
| **B** | 214 | 8.4 | 218 | 8.6 | 238 | 9.4 | 284 | 11.2 | 310 | 1.2 | 304 | 11.9 | 406 | 16 |
| **C** | 144 | 5.6 | 136 | 5.3 | 84 | 3.3 | 44 | 1.7 | 14 | 0.5 | N/A | N/A | 44 | 1.7 |
| **D** | 204 | 8.0 | 220 | 8.6 | 324 | 12.7 | 400 | 15.7 | 464 | 18.2 | 570 | 22.4 | 766 | 30.1 |
| **E** | 133 | 6.1 | 142 | 5.6 | 93 | 3.6 | 56 | 2.2 | N/A | N/A | N/A | N/A | N/A | N/A |
| **F** | 150 | 5.9 | 129 | 5 | 120 | 4.7 | 115 | 0.6 | 159 | 6.2 | 172 | 6.7 | 219 | 8.6 |
| **G** | 194 | 7.6 | 207 | 8.1 | 263 | 10.3 | 272 | 10.7 | 338 | 13.3 | 378 | 14.8 | 510 | 20 |
| **Kg/lb** | 16.4 | 36.1 | 18.6 | 40 | 35.1 | 77.2 | 51 | 112 | 70.8 | 156 | 107 | 235 | 237 | 522 |

## Factory Standard

### MAIN VALVE

**BODY & COVER**

- Ductile iron
- Cast Steel WCB
- Stainless Steel CF8
- Stainless Steel CF8M
- Nickel Aluminum Bronze

**ELASTOMERS:**

- NR, fabric reinforced Natural Rubber
- EPDM, fabric reinforced
- NBR, fabric reinforced Nitrile Rubber

**COATING:**

- Base layer – high built Epoxy FBE
  Top layer – electrostatic Polyester powder RAL 3000
- Rilsan Polyamide based (Nylon 11)
- Internal – vitreous Enamel
  External – Epoxy/Polyester powder RAL 3000

### TRIM

**PIPING & TUBING:**

- Stainless Steel 316
- Copper/Brass
- Cupro-Nickel
- Monel®

**FITTINGS:**

- Stainless Steel 316
- Brass
- Super Duplex
- Cupro-Nickel
- Monel®

**ACCESSORIES:**

- Stainless steel CF8M / 316
- Brass
- Nickel Aluminum Bronze
- SMO-245
- Monel®

### PLEASE SPECIFY

- Working Media
- Deluge valve ends
- Deluge valve coating
- Trim material
- Ambiental conditions
- Min/Max operating flow
- Min/Max operating pressure
- Downstream set pressure
- Solenoid Voltage
- Solenoid Enclosure
- Solenoid Protection
- Pneumatic working pressure
- System installation orientation
- Additional accessories needed

For more detailed technical information, please refer to chapter Engineering Data.



Raphael reserves the right to change the contents without notice