Electro-Pneumatically Actuated, Local reset, Pressure Reducing Deluge Valve

FDV - PC0

The FDV-PC0 fire protection system is based on Raphael's FDV deluge valve and features a control trim that can be actuated both, pneumatically and electrically. The FDV valve is available in a variety of materials and coatings, making it suitable for installation in hazardous environments.

The FDV-PC0 deluge system is pneumatically actuated and can be reset locally. In the event of a fire, exposure of the pneumatic dry pilot detection line to heat causes one or more of its automatic sprinklers to shatter, venting air pressure from the actuator and triggering the deluge valve to open. Alternatively, if a sensor from the electric detection system activates the main control board, it opens a solenoid valve that vents the dry pilot line, thereby opening the deluge valve.

The system is capable of reducing upstream pressure to a preset downstream level and maintaining it steadily. It automatically compensates for downstream pressure fluctuations caused by changes in flow demand, ensuring consistent performance.

The deluge system includes an emergency valve that bypasses the fire detection systems for manual operation. Additionally, the trim includes a PSA device that enables local system to reset - i.e., closing the FDV valve by re-pressurizing its control chamber. This system is suitable for configurations with automatic sprinklers installed on the dry pilot line and open nozzles on the main spray lines.



MARKETS

Commercial · Industry · Marine · P.O.G. · Storage · Residential · Airport

TECHNICAL DATA

FLUID: Water, Brackish water, Sea water, Foam

PNEUMATICS: Air, Nitrogen

SIZE RANGE:
40 mm to 250 mm (1½'' to 10")

AVAILABLE CONNECTIONS ENDS:
Flange*Flange, Groove*Groove, Flange*Groove, Groove*Flange, Thread*Thread

PRESSURE NOMINAL:
250 psi (17.2 bar)

REGULATION RATIO: 5:1

SENSITIVITY: 1.45 psi (0.1 Bar)

APPROVALS

ADVANTAGES

- Only three parts: body, diaphragm, and cover plate. No wet metal spring inside the control chamber.
- Full-bore, unobstructed design.
- Simple manual reset to the valve's standby position without draining or opening the valve itself, and without closing the OS &Y or other system valves.
- Maintained in a standby closed position.
- Low maintenance cost: the valve can be serviced in-line and includes only one replaceable part — a long-life elastomeric diaphragm.
- Complies with NFPA 25, the standard for the inspection, testing, and maintenance of water-based fire protection systems.

CHARACTERISTICS

- The hydro-dynamic pattern design ensures high flow rates with minimal head loss.
- The valve opens automatically upon a gradual release of water pressure from its control chamber. It is actuated either by an electric signal conveyed to the valve's solenoid or by a release of pneumatic pressure in the Dry Pilot Line due to exposure to flame heat.
- Soft closing occurs when the valve's control chamber is pressurized, either by line pressure or by an independent water source, thereby preventing pressure surges.
- A pressure-reducing pilot enables full control of the downstream pressure and ensures a stable setpoint across a wide pressure range.

The FDV-PC0 resets to a stand-by closed position either by de-energizing the solenoid coil of the alarm system through the main control panel or by pressurizing the Dry Pilot Line and manually operating the PSA device, in accordance with the relevant triggered alarm system.

Schematic drawing:

FDV-PC0

Set position

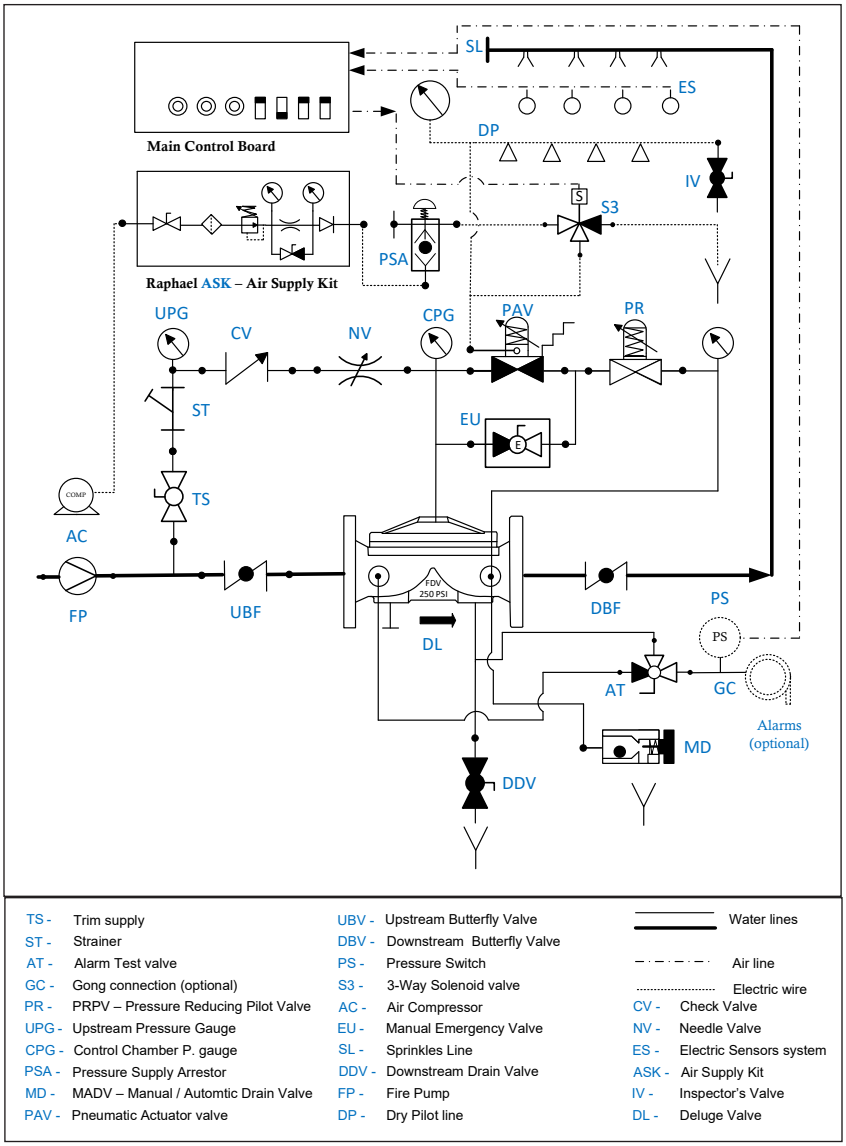

OPERATION

SET POSITION

Pressurized water in the valve's control chamber (DL) is trapped by the closed pneumatic actuator (PAV), the closed emergency valve (EU), and the check valve (CV), thereby maintaining the deluge valve in its closed position.

FIRE SITUATION

When one or more automatic fire sprinklers in the Dry Pilot (DP) detection line are exposed to a predetermined temperature and open, the pilot line depressurizes, causing the pneumatic actuator to open.

Alternatively, an electric detection system may sense heat and trigger the main control board, which in turn energizes the three-way solenoid valve (S3). This solenoid valve bypasses the Dry Pilot detection, vents the pneumatic actuator (PAV) control chamber to the atmosphere, and opens it. The FDV-PC0's control chamber is then drained through the pressure-reducing pilot valve (PR), causing the deluge valve to open and admit water to the spray sprinkler line at a steady, preset pressure.

RESET POSITION

To initiate a system reset, all opened fire sprinklers in the dry Pilot detection line must be replaced. Additionally, the electrical alarm system must be reset and the solenoid valve de-energized. The PSA (PSA) push button should be pressed, and the Dry Pilot Valve repressurized.

As a result, the pneumatic actuator is pressurized, and the FDV deluge valve closes.

Raphael reserves the right to change the contents without notice

Typical installation

FDV - PC0

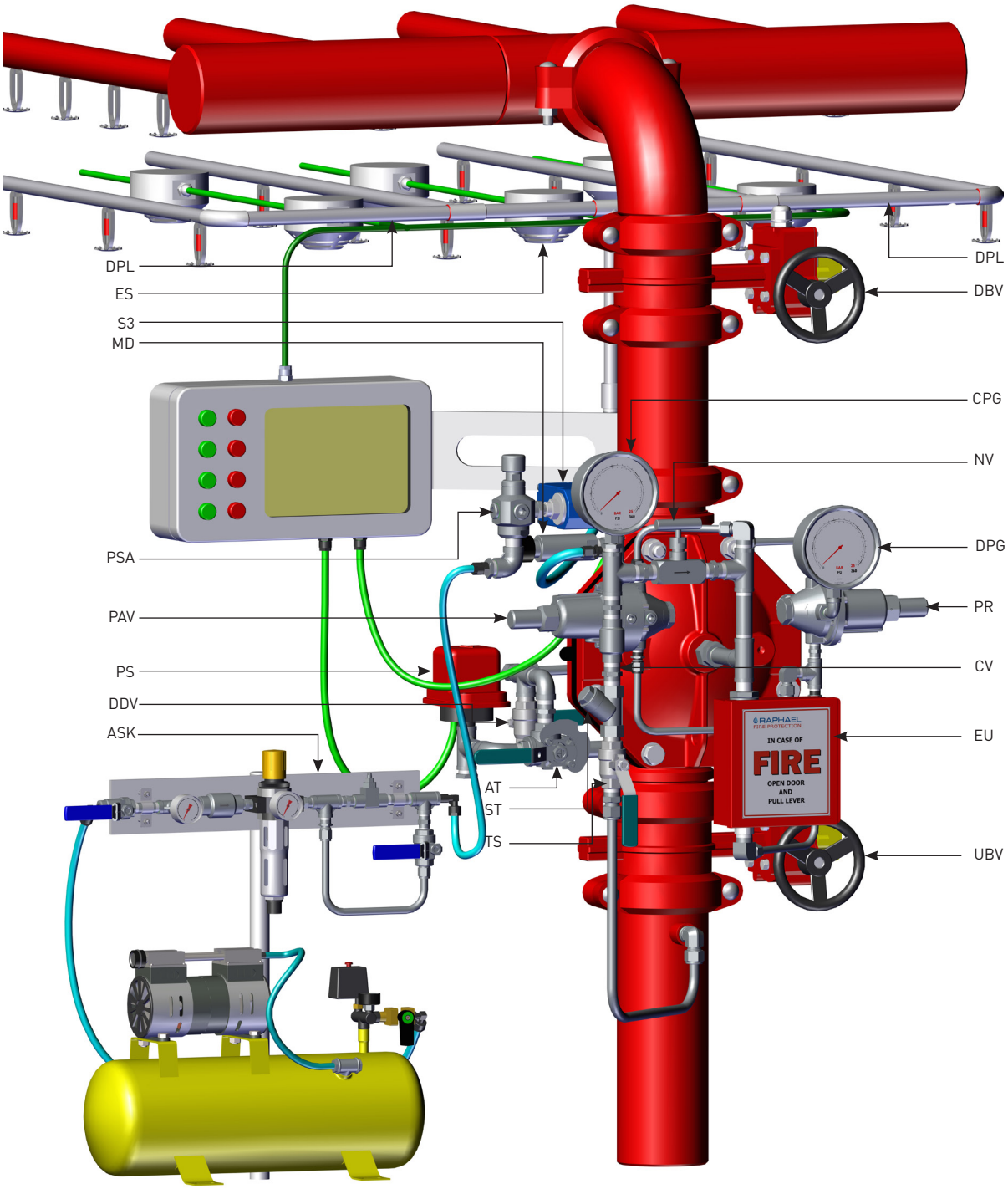

TS - Trim supply valve
ST - "Y" Strainer
AT - Alarms test valve
NV - Needle valve bypass
GC - Gong connection
PG - Pressure switch
S3 - 3-way Solenoid valve

PR - Pressure Reducing Pilot Valve
CV - Check Valve
ASK - Air Supply Kit
DDV - Downstream drain valve
PAV - PAV-2 Pneumatic Actuator
PSA - PSA – Pressure Supply Arrestor
ES - Electric Sensors

DPL - Dry Pilot Line
NV - Needle Valve
CPG - Control Chamber pressure Gauge
DPG - Downstream Pressure Gauge
EU - MEU manual Emergency Unit
UBV - Upstream Butterfly Valve
DBV - Downstream Butterfly Valve

Parametric drawing:

FDV-PC0

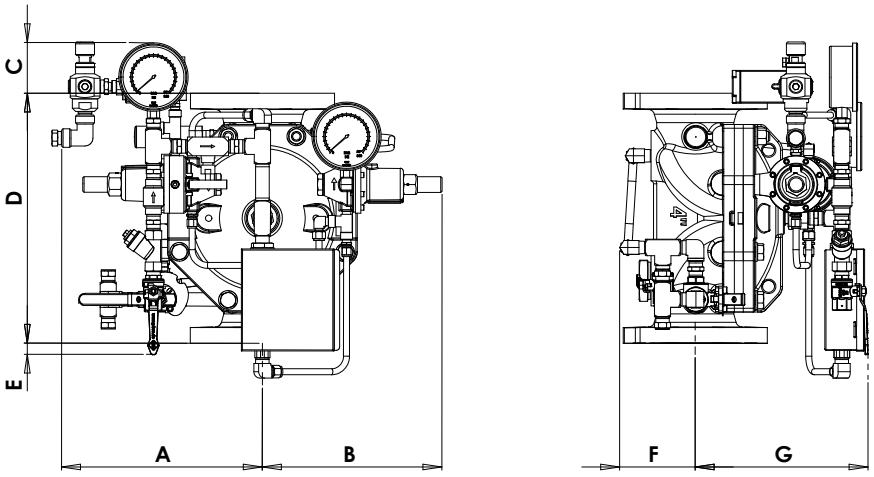

Dimensions Table

Size	1½", 2"		3"		4"		6"		8"		10"	
	mm	inch	mm	inch	mm	inch	mm	inch	mm	inch	mm	inch
A	255	10	255	10	296	11.6	290	11.4	340	13.4	372	14.6
B	214	8.4	214	8.4	247	9.7	284	11.2	323	12.7	376	14.8
C	150	5.9	150	5.9	139	5.5	80	3.2	N/A	N/A	45	N/A
D	224	8.8	325	12.8	401	15.8	462	18.2	580	22.8	768.5	30.2
E	151	5.9	155	6.1	93	3.6	56	2.2	N/A	N/A	N/A	N/A
F	150	5.9	150	5.9	128	5	120	4.7	172	6.7	220	8.5
G	194	7.6	194	7.6	255	10	273	10.7	380	14.9	510	20
Kg/lb	17.8	39.2	17.8	39.2	36.6	80.6	52.5	115.7	108	238	238	524

Factory Standard

MAIN VALVE

BODY & COVER

- Ductile iron
- Cast Steel WCB
- Stainless Steel CF8
- Stainless Steel CF8M
- Nickel Aluminum Bronze

ELASTOMERS:

- NR, fabric reinforced Natural Rubber
- EPDM, fabric reinforced
- NBR, fabric reinforced Nitrile Rubber

COATING:

- Base layer – high built Epoxy FBE
  Top layer – electrostatic Polyester powder RAL 3000
- Rilsan Polyamide based (Nylon 11)
- Internal – vitreous Enamel
  External – Epoxy/Polyester powder RAL 3000

TRIM

PIPING & TUBING:

- Stainless Steel 316
- Copper/Brass
- Cupro-Nickel
- Monel®

FITTINGS:

- Stainless Steel 316
- Brass
- Super Duplex
- Cupro-Nickel
- Monel®

ACCESSORIES:

- Stainless steel CF8M / 316
- Brass
- Nickel Aluminum Bronze
- SMO-245
- Monel®

PLEASE SPECIFY

- Working Media
- Deluge valve ends
- Deluge valve coating
- Trim material
- Ambiental conditions
- Min/Max operating flow
- Min/Max operating pressure
- Downstream set pressure
- Solenoid Voltage
- Solenoid Enclosure
- Solenoid Protection
- Pneumatic working pressure
- System installation orientation
- Additional accessories needed

For more detailed technical information, please refer to chapter Engineering Data.

Raphael reserves the right to change the contents without notice