# IOM FDV-DP1

**PNEUMATICALLY ACTUATED, REMOTE RESET, DELUGE VALVE**

**I**nstallation **O**peration & **M**aintenance manual

**Fire Protection**

**RAPHAEL VALVES INDUSTRIES**

RAPHAEL FP

# IOM FDV-DP1

**Pneumatically Actuated, Remote Reset, Deluge Valve**

## DESCRIPTION

This deluge system is based on Raphael's FDV valve and is equipped with a pneumatically actuated control trim. The installed FDV valve is available in a range of optional materials and coatings to meet the required operating conditions, but the functional principle of the system remains unchanged.

In a fire event, a pneumatic detection system (dry pilot line sprinklers) activates the valve's control trim. As a result, the pressurized water trapped in the FDV control chamber is released and the valve opens.

This system is suitable for automatic water spray through the dry pilot pipeline and for use with open nozzles on the main spray pipelines.



# PARTS LIST

## Pneumatically Actuated, Remote Reset, Deluge Valve

1. MADV (MB) Drain valve
2. Pneumatic actuator
3. Pressure switch (Optional)
4. Downstream drain valve
5. Alarm test valve (3 way)
6. "Y" Strainer
7. Trim Pressure Supply Valve
8. Control chamber pressure gauge
9. Deluge valve
10. Orifice
11. MEU Manuel emergency unit
12. Upstream pressure gauge
13. PAV-2 Pneumatic actuator
14. Upstream drain (Plugged)

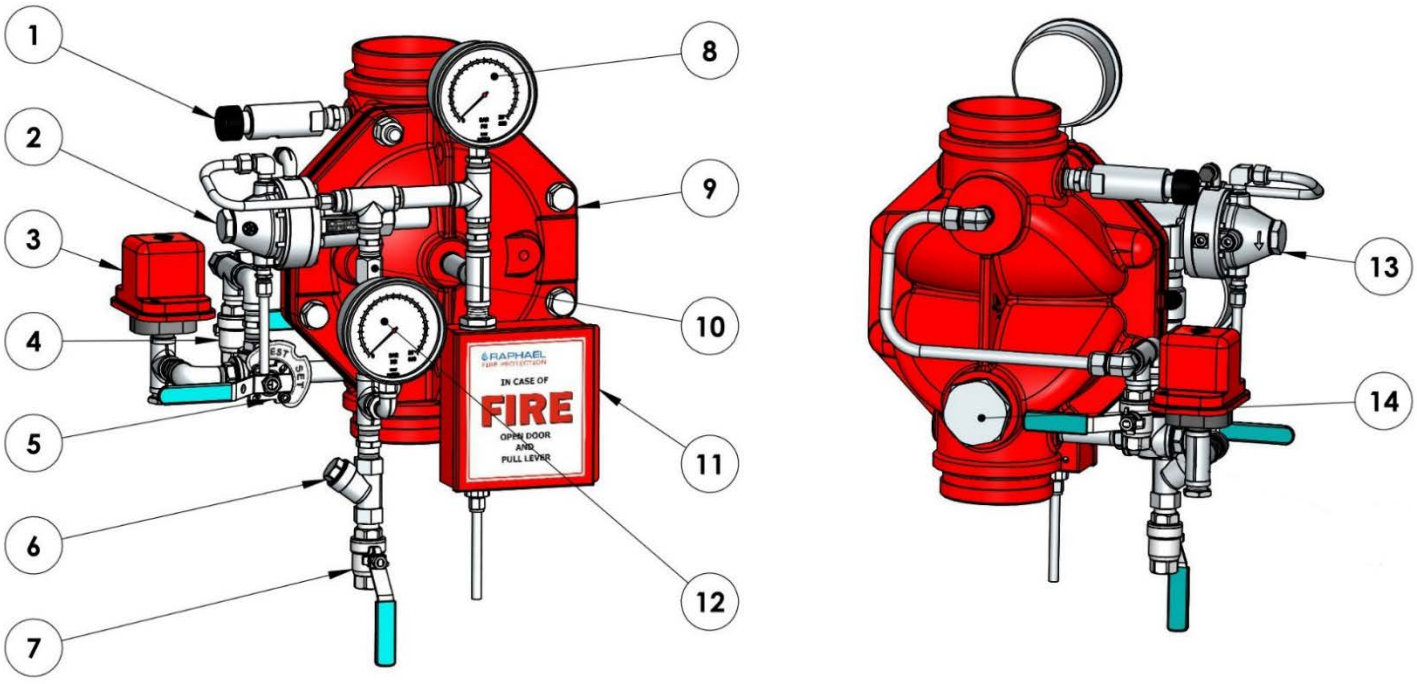


**Fig. 1**

# OPERATION (Reference Figure 1)

## SET position:

Water is supplied by the trim pressure supply valve (7), passes through the “Y” strainer (6) and check valve, flows through the orifice (10), and fills the FDV’s control chamber. Pressurized water in the FDV control chamber is trapped by the check valve, the pneumatic actuator PAV-2 (2), and the closed emergency valve MEU (11), keeping the deluge valve in the closed position.

The sense chamber of the PAV-2 actuator is subjected to constant pneumatic pressure from the dry pilot line, maintaining the actuator in its CLOSED state and thereby blocking the FDV’s drain line.

## FIRE situations:

When one or more automatic sprinklers on the dry pilot line are exposed to fire, they blow open, venting the pneumatic pressure to the atmosphere.

When the PAV-2 sense chamber is de-pressurized, the actuator moves to its OPEN state and drains the FDV’s control chamber through the PAV-2 vent port to the atmosphere. The FDV deluge valve opens, admitting water into the pipeline of open spray nozzles.

Opening the MEU door and pulling down the ball valve handle bypasses all control functions, drains the FDV control chamber, and immediately opens the valve.

## RESET position.

The upstream butterfly valve must be closed and all blown-open sprinklers on the dry pilot line must be replaced. This allows the dry pilot line and the PAV-2 sense chamber to be re-pressurized. Consequently, the PAV-2 actuator returns to its CLOSED position, blocking the valve’s control chamber drain line. At the same time, upstream pressure passes through the orifice, pressurizing the deluge control chamber and closing the valve. The water spray from the open sprinklers stops. After this sequence, the upstream butterfly valve must be reopened.

It is recommended to drain the spray pipeline by opening the FDV downstream drain valve (14) or by pressing the MADE (MB) push-button (1).

RAPHAEL FP

## INSTALLATION (Reference Figure 2)

1. This system is supplied pre-assembled and factory pre-adjusted. Any change carried out at the system's trim components order, pipes and tubes length or ports for axillary connection sizes, will affect the system operation and therefore, prohibited.

2. The system cannot be installed at a location where it might be subjected to freezing temperatures.

3. maintaining sufficient room around the system location ensures operational safety, and ease of maintenance.

4. It should be considered that water will be drained during regular maintenance on a routine basis, during periodical tests procedures and when operating in a fire situation. Therefore, a drainage plan should be considered.

5. The system described is to be mounted vertically only. Systems with identical operation but for horizontal installation are marked with a prefix "H", e.g. HFDV-DP1.

6. The downstream pipe connected to the FDV valve at Vertical and horizontal mount system, is to be supported firmly to prevent the pipeline's weight loaded on the system's valve.

7. Any use of pipe/thread reduction-fittings installed at open ports designated for axillary components, (like water motor alarm, trim pressure supply, FDV valve's drains), is prohibited.

8. All connections to water supply, should be done in accordance with figure 2
   (**1**) – Trim pressure supply connection - ½" NPT female.
   Alarm gong to alarm test valve - ½" NPT female.
   (11 Fig 2) – Dry pilot line to the PAV-2 actuator – ¼" NPT female (temporary plugged).

9. The FDV valve should be installed with the flow arrow marked on the valve's body, in the proper direction.

RAPHAEL FP

# INSTALLATION PARTS LIST (Reference Figure 2)

## Pneumatically Actuated, Remote Reset, Deluge Valve

1. Trim supply valve (1/2” NPT female)
2. Y Strainer
3. Upstream separation valve (butterfly or OS&Y valves) .
4. MEU Manual Emergency Unit
5. Upstream pressure gauge
6. Downstream pressure gauge
7. Downstream separation valve (butterfly or OS&Y valves) .
8. Dry pilot line
9. MADV – Manual Automatic Drain Valve (MB)
10. PAV-2 Pneumatic Actuator Valve 2 way.
11. Pressure switch*****. (½” NPT female connection) *
12. Downstream drain valve (1/2” NPT female)
13. 3-way alarm test valve
14. ASK Air Supply Kit (In & out ¼” NPT female) *.

*** Optional**

RAPHAEL FP

**Pneumatically Actuated, Remote Reset, Deluge Valve**

**Fig. 2**

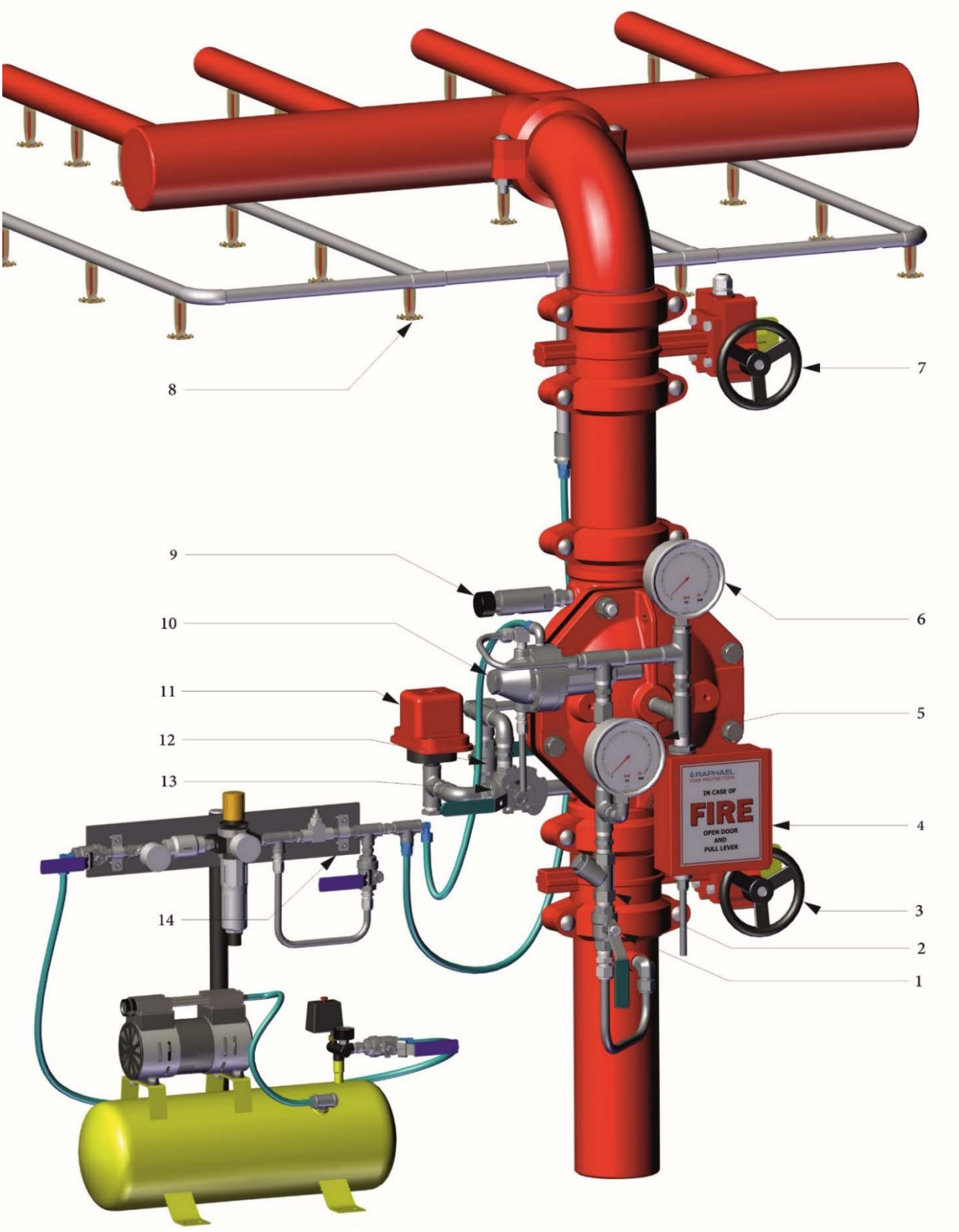

RAPHAEL FP

# OPERATING INSTRUCTIONS (Reference Drawing - figure 2)

## Commissioning the system - Phase 1

## Filling and pressurizing the system.

***The procedure described should be carried out after system installation completion and a comprehensive inspection.*** (Reference Drawing - figure 2)

1. The filling process is performed only after flushing the pipeline. The flushing needs to be done when both butterfly valves (**3** & **7**) are open, and the trim supply valve (**1**) is close.

2. Make sure the upstream butterfly valve (**3**) is fully close.

3. Make sure the trim pressure supply ball valve (**1**) is Closed.

4. Make sure that the Emergency valve in the EMU (**4**) is fully closed.

5. Pressurize the pilot line to the rated pressure. No adjustments at the PAV-2 actuator are needed as the device is factory set.

6. Make sure the FDV's downstream drain valve (**12**) is open and upstream drain remains plugged or its valve (if equipped) is close.

7. Open the trim pressure supply valve (**1**) and fill the trim and FDV's control chamber.

8. Open gradually the upstream butterfly valve (**3**) and make sure the downstream drain (**12**) valve is not dripping.

9. If ok, close the Downstream drain valve.

The system is ready for the "**fire situation simulation**".

RAPHAEL FP

## Commissioning the system - phase 2.

## Fire Situation Simulation

*The procedure described should be carried out after the system was pressurized and a comprehensive leakage inspection was commissioned.*
*Energizing the solenoid can simulate a fire situation and cause the system to response by opening the FDV deluge valve.*

**NOTICE:**
***Prior to any stoppage of the fire protection system, a fire patrol should be placed in the area covered by the interrupted system.***
***Prior to generating any test procedures, turning on false alarms or turning off the alarm system, the local safety personnel and the close central fire station must be reported.***
(Reference drawing - figure 2)

1. Open downstream drain valve (**12**).

2. Close the downstream butterfly valve (**7**).

3. Open the inspector's valve (at the end of the dry pilot line **8** – not illustrated) and vent the pilot line. The pilot's pressure drop will cause the PAV-2 actuator to open and drain the FDV's control chamber. Consequently, the FDV deluge valve will open.

4. Observe the downstream drain valve (**12**): A significant stream of water should flow out of this valve. If ok.

**The system is ready for re-setting and placing in service**

RAPHAEL FP

## Commissioning the system - phase 3.

## Resetting & placing in service

*The procedure described should be carried out after any periodic operational test - simulated or real fire situation. After a real fire situation, replace all blown-open sprinklers before pressurizing the pilot line.*

***Resetting after a Fire Situation <u>Simulation</u>:***

1. Close the Upstream Butterfly valve (**3**)
2. Close the trim pressure supply (**1**).
3. Close the inspector's valve (at the end of dry pilot line **8**).
4. Disassemble the "Y" strainer (**2**) and clean its screen. Re-assemble the strainer.
5. Open the pressure supply valve (**1**). Pressure gauges **5** & **6** need to show the same reading.
6. The Upstream Butterfly valve (**3**) and the downstream butterfly valve (**7**) should be opened gradually.

***Resetting after a <u>Real</u> Fire Situation:***

1. Close the Upstream Butterfly valve (**3**)
2. Close the trim pressure supply (**1**).
3. Close the entrance ball valve at the ASK (**14**)
4. All the Dry pilot line's blown-open sprinklers need to be replaced (**8**).
5. When done, open the entrance ball valve at the ASK (**14**)
6. Disassemble the "Y" strainer (**2**) and clean its screen. Re-assemble the strainer.
7. Open the pressure supply valve (**1**). Pressure gauges **5** & **6** need to show the same reading.
8. Open gradually the Upstream Butterfly valve (3).

**The system is in SET state and placed in service.**

# MAINTENANCE

*Prior to any stoppage of the fire protection system, a fire patrol should be placed in the area covered by the interrupted system.*
*Prior to generating any test procedures, turning on false alarms or turning off the alarm system, the local safety personnel and the close central fire station must be notified.*

*The Maintenance and inspection procedures are based on the relevant chapters at NFPA 25.*

## Daily Inspection

Make sure that the deluge valve's heating system (If equipped), functions correctly and that the Fire protection valve surrounding temperature is 4°C min.

## Monthly Inspection

1. Observe the FDV valve for external damage: observe the piping and hose connections for leakage or damage.

2. Verify that the upstream butterfly valve (**3** figure 2) and the Trim pressure supply valve (**1**) are in fully open position.
   Downstream drain valve (**12**) and upstream drain valve (if equipped) are fully close.

3. Observe the FDV control chamber pressure gauge (**6**) and the upstream pressure gauge (**5**) make sure that its readings are the same and that the required supply water pressures are applied to the deluge Valve inlet and trim.

4. Push the MADV (MB) (**9**) and make sure that after emptying condensing water, the drain flow/dripping stops. If a constant leakage is observed, it might indicate a deluge valve sealing problem.

5. Move the 3-way SET/TEST valve (**13**) to TEST. The acoustic alarm should sound, and the alarm pressure switch (**11**) should transmit a signal to the main control board.

## Annual test procedure

1. Conduct the monthly test & inspection procedure.

2. Perform the procedure described in chapter - **Commissioning the system - phase 2. -** Fire Situation Simulation. Check the system's proper operation.

3. Follow the procedure described in chapter - **Commissioning the system - phase 3.** - Resetting & placing in service, chapter ***Resetting after a Fire Situation Simulation.***

## Every 5 years inspection procedure

*This major inspection and maintenance procedure includes the removal of the trim, the dismantling of the FDV's valve cover and the performance of a comprehensive internal part examination. Then, the relevant trim accessories should be replaced, after completion, the Annual maintenance procedure is to be conducted.*

1. Close the upstream butterfly valve (**3**) and the trim pressure supply valve (**1**).
2. Open the drain valves (**12**) and the upstream drain valve if equipped. Drain the FDV's control chamber using the EMU Emergency valve (**4**).
3. Turn off or disconnect all relevant electrical circuits.
4. Release all relevant tubes fitting nuts and the central union pipe connection (if equipped) at valves cover center.
5. Remove the disassembled front trim.
6. Remove all the FDV's cover bolts. The cover will hang on its studs. Release both nuts and remove the cover carefully.
7. Observer the internals of the valve and cover for excessive scale residuals, foreign particles, damaged coating (rust, cracks, or pealing).
8. Worn or damaged parts should be replaced. Consult Raphael's local representative or the service department for any maintenance issue or part replacement issue.
9. Replace the Diaphragm. The identification tongue should point to the valve's stamped size (diameter in inch) side.

10. Reinstall the valve's cover: use the Anti-seize paste tube supplied in the maintenance kit for bolts and nuts pre-installation lubrication. Tight it in accordance with **"Bolt's torque moments table".**

11. Reinstall the front trim carefully: avoid causing twists or dents on bent tubes and do not overtight the compression fitting's nuts.

12. When the system is fully re-assembled, perform the "**Commissioning the system - phase 1** - Filling and pressurizing the system" procedure.

13. Perform the **Annual test procedure.**

## Bolt's Torque Moments Table

**Bolt's Torque Moments Table**

| **Valve size** | 1.5" | 2" | 2.5" | 3" | 4" | 6" | 8" | 10" |
|---|---|---|---|---|---|---|---|---|
| **Torque lb/ft** | 22 | 29 | 36 | 54 | 65 | 72 | 87 | 118 |

**Equivalent pipe length for FDV deluge valves**

| **Valve size** | | 1.5" | 2" | 2.5" | 3" | 4" | 6" | 8" | 10" |
|---|---|---|---|---|---|---|---|---|---|
| **Equivalent length value** | ft | 11 | 24 | 25 | 28 | 31 | 46 | 72 | 117 |
| | m | 3.6 | 7.3 | 7.6 | 8.5 | 9.4 | 14 | 21.9 | 35.6 |

RAPHAEL FP

# MARKING

The FDV valves are marked by a laser engraved, black anodized, 0.8mm (0.031”) thick metal plate, riveted to the valve’s cover.

- *Company name and trademark.*
- *Short description (Italic letters)*
- *Application’s type*: **FDV-DP1** - Pneumatic actuated Remote Reset.
- (P/N) *The Application’s part number*: System properties–Valve properties
- *Rated pressure*: 250 psi
- *Equivalent Length: reference table - page 13.*
- *Serial Number*: Work order number-MM-YY-Number in batch 01-99
- *The UL listing mark & QR code:* EXxxxxx
- *The FM approved mark*
- *The Application’s* diameter in inch: XX”

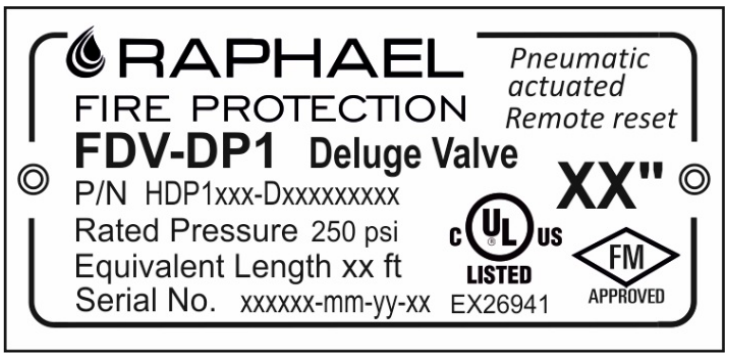

RAPHAEL FP

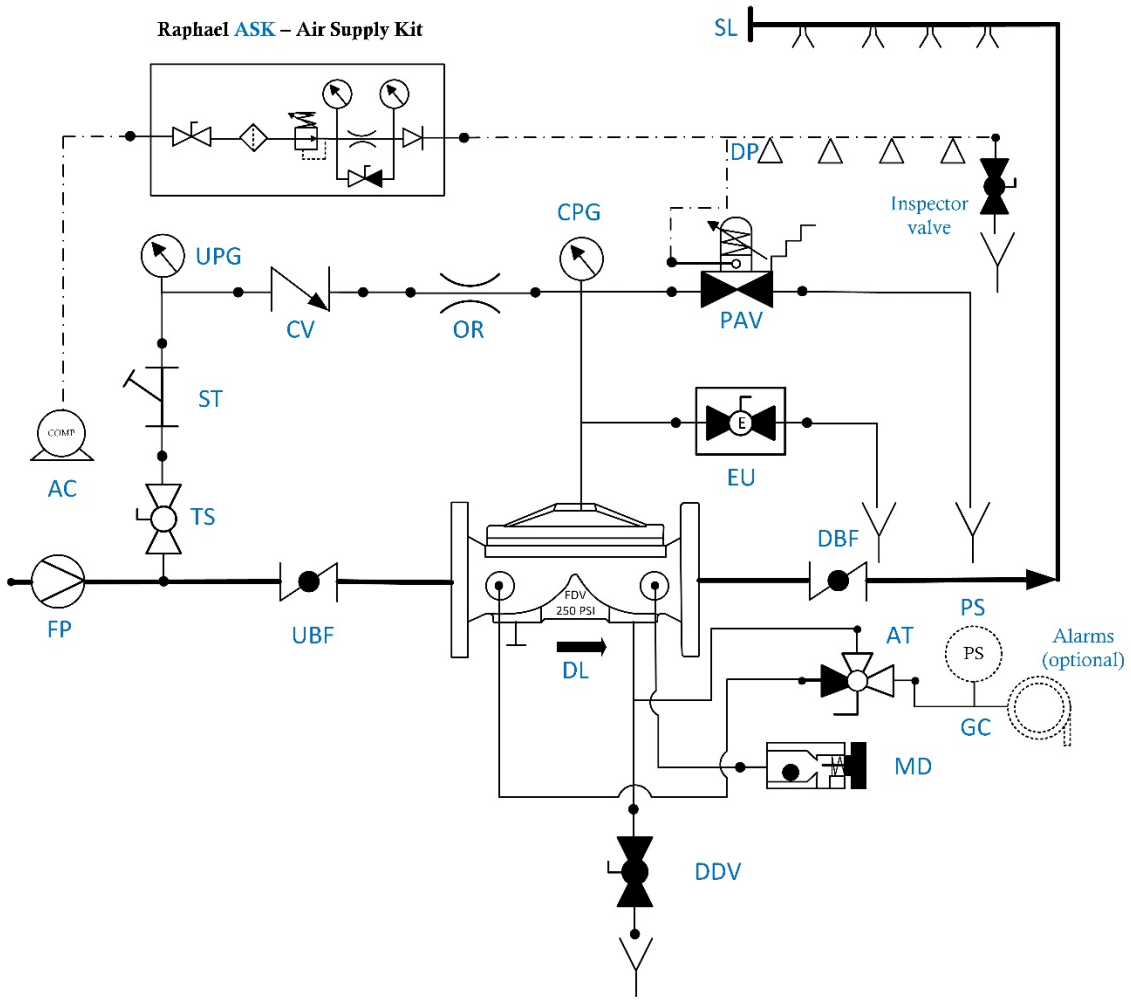


| | | | | | |
|---|---|---|---|---|---|
| TS - | Trim supply | UBV - | Upstream Butterfly Valve | | Water lines |
| ST - | Strainer | DBV - | Downstream Butterfly Valve | | |
| AT - | Alarm Test valve | PS - | Pressure Switch | | Air line |
| GC - | Gong connection | DP - | Dry Pilot Line | | |
| CV - | Check Valve | AC - | Air Compressor | | |
| UPG - | Upstream Pressure Gauge | EU - | Manual Emergency Valve | | |
| CPG - | Control Chamber P. gauge | SL - | Sprinkles Line | | |
| OR | Orifice | DDV - | Downstream Drain Valve | | |
| MD - | MADV – Manual / Automtic Drain Valve | FP - | Fire Pump | | |
| PAV - | Pneumatic Actuator valve | | | | |

**RAPHAEL**, founded in 1949, is the first Israeli manufacturer of water control valves. RAPHAEL´s research department constantly strives to introduce new and innovative products and solutions for water control systems including water works, fire-protection and irrigation systems.




RAPHAEL

**RAPHAEL Valves Industries (1975) Ltd.**

North Industrial Zone Or Akiva, 3063927 P.O.Box 555, Israel

Tel. +972 4 6263555 | info@raphael-valves.com | raphael-valves.com

Nov-25