Pneumatically Actuated, Remote Reset Deluge Valve

FDV - DP1

The FDV-DP1 fire protection system is based on Raphael's FDV Deluge valve and is equipped with a pneumatically actuated control trim. The installed FDV valve offers a range of optional materials and coatings, designed for installations in hazardous environments.

The FDV-DP1 deluge system is actuated pneumatically and resets remotely: In a fire situation, when the pneumatic dry pilot detection line is exposed to flame heat, one or more of its automatic fire sprinklers shatter open, venting the air pressure from an actuator and commanding the deluge valve to open.

The Deluge system incorporates an emergency valve, bypassing the fire detection systems for manual operation. This system is suitable for automatic sprinklers at the dry pilot pipeline and with open nozzles at the main spraying pipelines.



MARKETS

Marine | Storage | P.O.G. | Tunnels | Airports | Industry

TECHNICAL DATA

FLUID: Water, Brackish water, Sea water, Foam

PNEUMATICS:
Air, Nitrogen

SIZE RANGE:
40mm to 250mm (1½'' to 10")

AVAILABLE CONNECTIONS ENDS:
Flange*Flange, Groove*Groove, Flange*Groove, Groove*Flange, Thread*Thread

PRESSURE NOMINAL:
250 psi (17.2 bar)

APPROVALS

ADVANTAGES

- Ony three parts: body, diaphragm & cover plate. No wet metal spring inside the control chamber.
- Unobstructed full bore valve.
- Simple manual reset of the valve to standby position without closing OS & Y or other valves in the system.
- Open fail safe valve, maintained in standby closed position.
- Low maintenance cost: the valve is serviced in-line with only one replaceable part which is long life elastomeric diaphragm.
- Conforms with inspection, testing and maintenance standards of water based fire protection systems, NFPA 25.

CHARACTERISTICS

- Hydro-dynamic pattern design ensures high flow rates with minimum head loss.
- The valve trips open automatically upon a gradual release of water pressure from its control chamber. The trip is actuated by Dry Pilot Line's pneumatic pressure release due to its exposure to flame heat.
- Soft closing upon pressurization of the valve's control chamber, by line pressure or other independent water source, prevents surges.

The FDV-DP1 resets to stand-by close position by pressurizing the Dry Pilot.

Schematic drawing: FDV-DP1

Set position

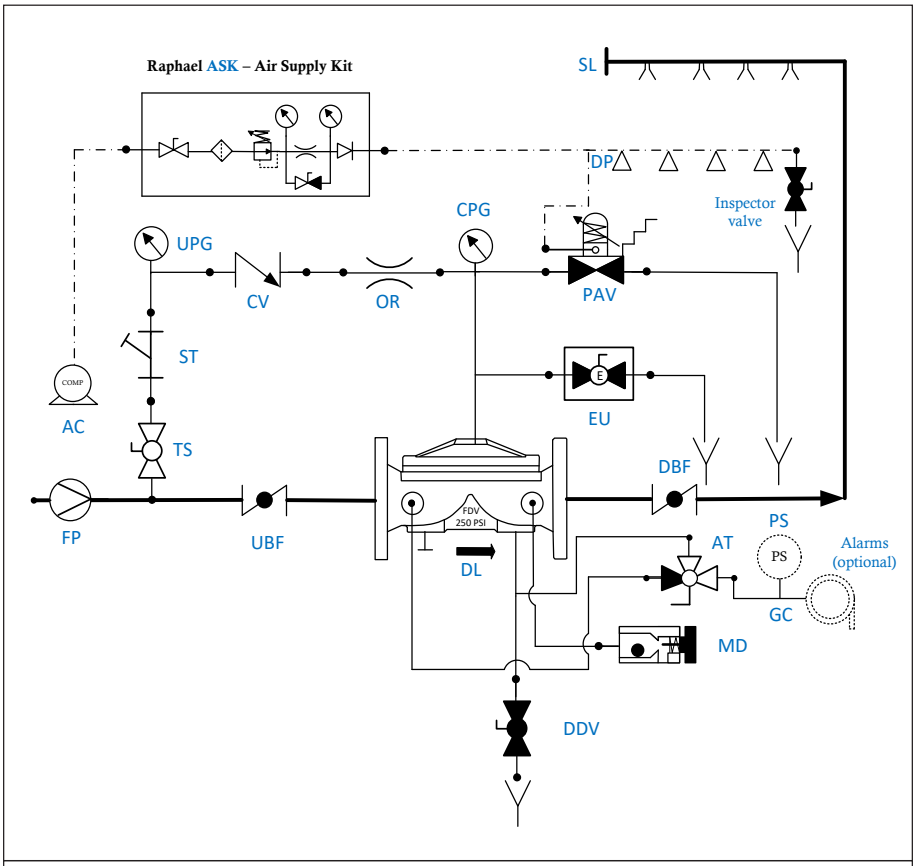

OPERATION

SET position

The pneumatic pressure accumulated in the Dry pilot line maintains the pneumatic actuator (PAV) close. Pressurized water in the valve's control chamber (DL) is trapped by the check valve (CV), the closed emergency valve (EU) and by the closed actuator (PAV), maintains the FDV Deluge valve close.

FIRE situation

When some of the Dry Pilot detection line's automatic fire sprinklers are subjected to flames heat and shatter-open, the pilot detection line depressurizes the actuator [PAV] control chamber. Consequently, the actuator opens and drains the deluge valve's control chamber. The FDV deluge valve opens and admits water to the spray sprinklers line.

RESET position

System reset requires the replacement of all the shattered-open automatic fire sprinklers in the Dry Pilot detection line. The detection line is then pressurized as well as the PAV actuator control chamber to reset it to the closed position. The FDV deluge valve's control chamber will be filled and pressurized through the orifice, causing the valve (DL) to close.

Raphael reserves the right to change the contents without notice

FDV - DP1

Typical installation

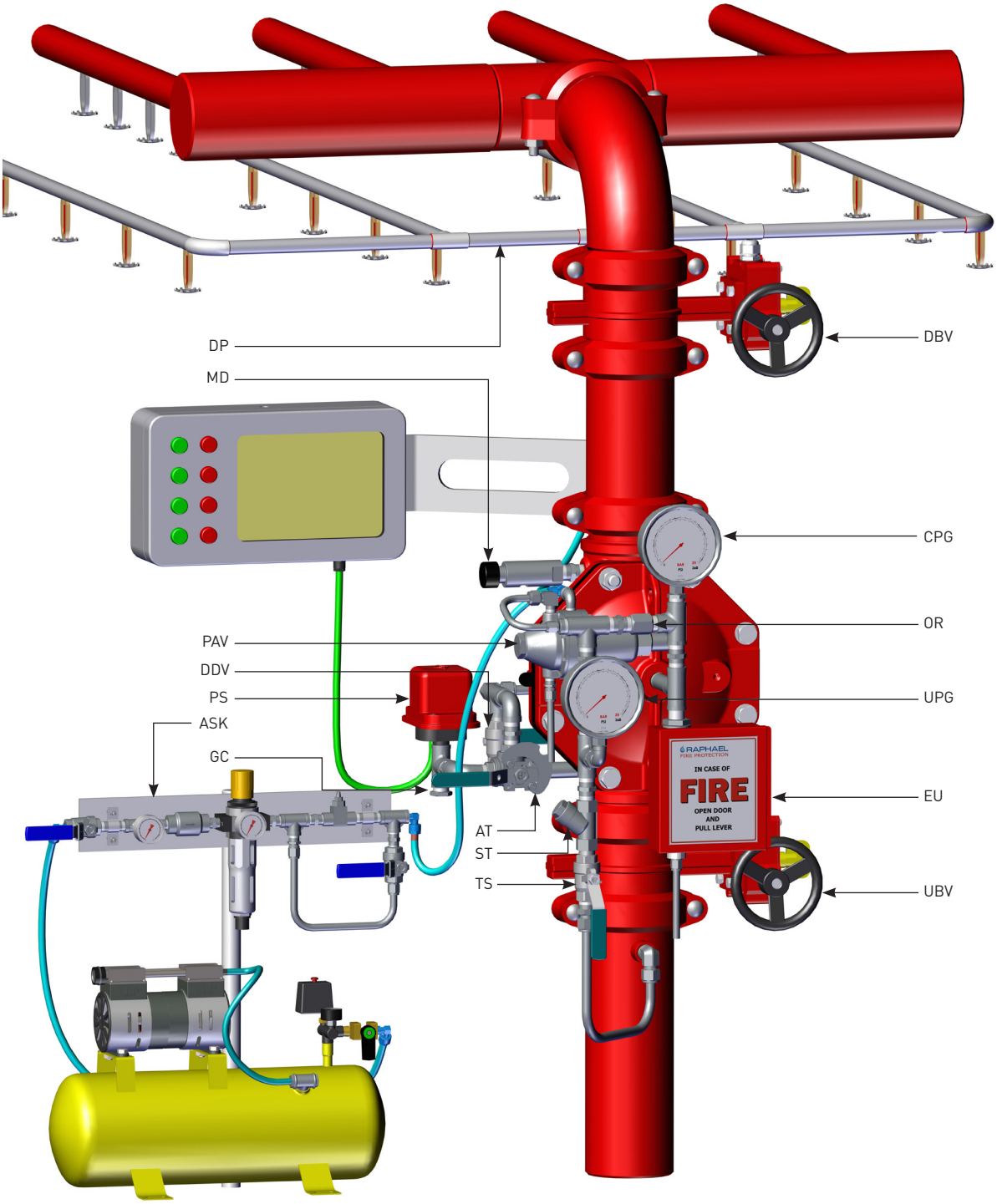

TS – Trim Supply
ST – Strainer
AT – Alarm Test valve
DP – Dry Pilot
GC – Gong Connection
DDV – Downstream Drain Valve

PS – Pressure Switch
PAV – Pneumatic Actuator Valve
MD – Manuel Automatic Drain Valve
ASK – Air Supply Kit
OR - Oriffice

ES – Electric Sensors
UPG – Upstream Pressure Gauge
CPG – Control chamber Pressure Gauge
UBV – Upstream Butterfly Valve
DBV – Downstream Butterfly Valve

Parametric drawing:

FDV-DP1

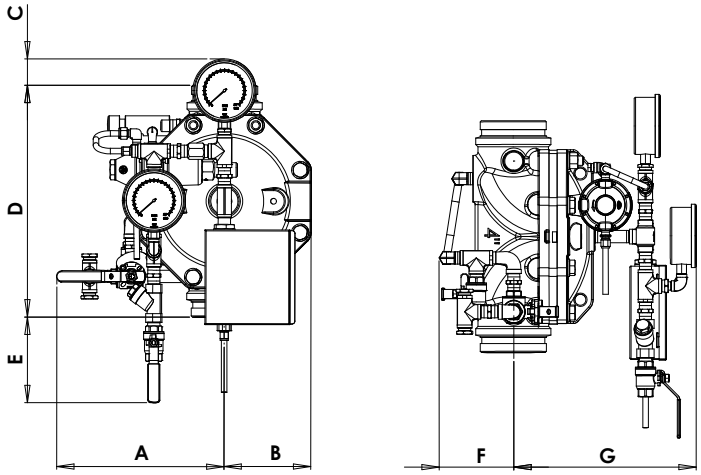

Dimensions Table

Size	1.5"		2"		3"		4"		6"		8"	10"	10"	
	mm	inch	mm	inch	mm	inch	mm	inch	mm	inch	mm	inch	mm	inch
A	254	10	254	10	275	10.8	290	11.4	194	7.6	225	8.8	373	14.6
B	122	4.8	122	4.8	122	4.8	150	5.9	293	11.5	346	13.6	308	12.1
C	135	5.3	130	5.1	76	3	36	1.4	10	0.4	N/A	N/A	N/A	N/A
D	202	8	325	12.8	324	12.7	400	15.7	464	18.2	570	22.4	766	30.1
E	267	10.5	257	10.1	171	6.7	135	5.3	100	3.9	47	1.8	N/A	N/A
F	117	4.6	118	4.6	120	4.7	120	4.7	158	6.2	158	6.2	192	7.5
G	260	10.2	275	10.8	304	11.9	310	12.2	380	14.9	415	16.3	505	19.9
Kg/lb	12	26.4	13.8	30.4	31	68.3	46.7	103	57.7	127	103	227	232	511

Factory Standard

MAIN VALVE

BODY & COVER

- Ductile iron
- Cast Steel WCB
- Stainless Steel CF8
- Stainless Steel CF8M
- Nickel Aluminum Bronze

ELASTOMERS:

- NR, fabric reinforced Natural Rubber
- EPDM, fabric reinforced
- NBR, fabric reinforced Nitrile Rubber

COATING:

- Base layer – high built Epoxy FBE
  Top layer – electrostatic Polyester powder RAL 3000
- Rilsan Polyamide based (Nylon 11)
- Internal – vitreous Enamel
  External – Epoxy/Polyester powder RAL 3000

TRIM

PIPING & TUBING:

- Stainless Steel 316
- Copper/Brass
- Cupro-Nickel
- Monel®

FITTINGS:

- Stainless Steel 316
- Brass
- Super Duplex
- Cupro-Nickel
- Monel®

ACCESSORIES:

- Stainless steel CF8M / 316
- Brass
- Nickel Aluminum Bronze
- SMO-245
- Monel®

PLEASE SPECIFY

- Working Media
- Ambiental conditions
- Min/Max operating flow
- Min/Max operating pressure
- Pneumatic working pressure
- System installation orientation
- Deluge valve ends and standard
- Deluge valve material and coating
- Trim materials.
- Additional accessories needed

For more detailed technical information, please refer to chapter Engineering Data.

Raphael reserves the right to change the contents without notice