Pneumatically Actuated, Local Reset Deluge Valve

FDV - DP0

The FDV-DP0 fire protection system is based on Raphael's FDV deluge valve and is equipped with a pneumatically actuated control trim. The FDV is a fire protection control valve for deluge sprinkler systems, specifically designed for installation in hazardous environments. It is suitable for both vertical and horizontal installations and features a globe-pattern, line-pressure-operated design with a direct elastomeric diaphragm seal. The valve contains no balancing spring and no internal metallic components in the wetted area. Its hydrodynamic flow path ensures high flow rates with minimal head loss.

The FDV-DP0 deluge system is pneumatically actuated and locally resettable. In a fire situation, when the pneumatic dry pilot detection line is exposed to flame heat, one or more automatic sprinklers shatter, venting air pressure from the actuator and causing the deluge valve to open.

The system incorporates an emergency valve that bypasses the fire detection system for manual operation. Additionally, the trim is equipped with a PSA - a device that enables local system reset, i.e., closing the FDV valve by repressurizing its control chamber.

The system is suitable for use with automatic sprinklers on the dry pilot pipeline and with open nozzles on the main spraying pipelines.

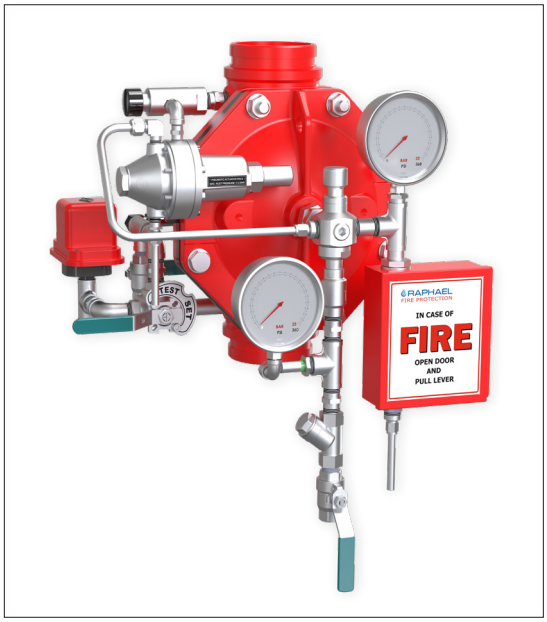

MARKETS

Commercial · Marine · Residential · Industry · P.O.G.

TECHNICAL DATA

FLUID:
Water, Brackish water, Sea water, Foam

SIZE RANGE:
40mm to 250mm (1½'' to 10")

AVAILABLE CONNECTIONS ENDS:
Flange*Flange, Groove*Groove, Flange*Groove, Groove*Flange, Thread*Thread

PRESSURE NOMINAL:
250 psi (17.2 bar)

PNEUMATIC PRESSURE:
29-58 psi (2-4 bar)

APPROVALS

ADVANTAGES

- Ony three parts: body, diaphragm & cover plate. No wet metal spring inside the control chamber.
- Full-bore, unobstructed design.
- Simple manual reset to the standby position without draining or opening the valve, and without closing the OS&Y or other system valves.
- Fail-safe, open-type valve, maintained in the standby closed position by the PSA.
- Low maintenance cost: the valve can be serviced in-line and includes only one replaceable part — a long-life elastomeric diaphragm.
- Complies with NFPA 25, the standard for the inspection, testing, and maintenance of water-based fire protection systems.

CHARACTERISTICS

- Hydrodynamic pattern design ensures high flow rates with minimal head loss.
- The valve trips open automatically upon a gradual release of water pressure from its control chamber. The trip is actuated by the pneumatic pressure release of the Dry Pilot Line, caused by exposure to flame heat.
- Soft closing, upon pressurization of the valve's control chamber—by line pressure or an independent water source - prevents surges.

The FDV-DP0 resets to the standby closed position by pressurizing the Dry Pilot Line and manually operating the PSA device.

Schematic drawing: FDV-DP0

Set position

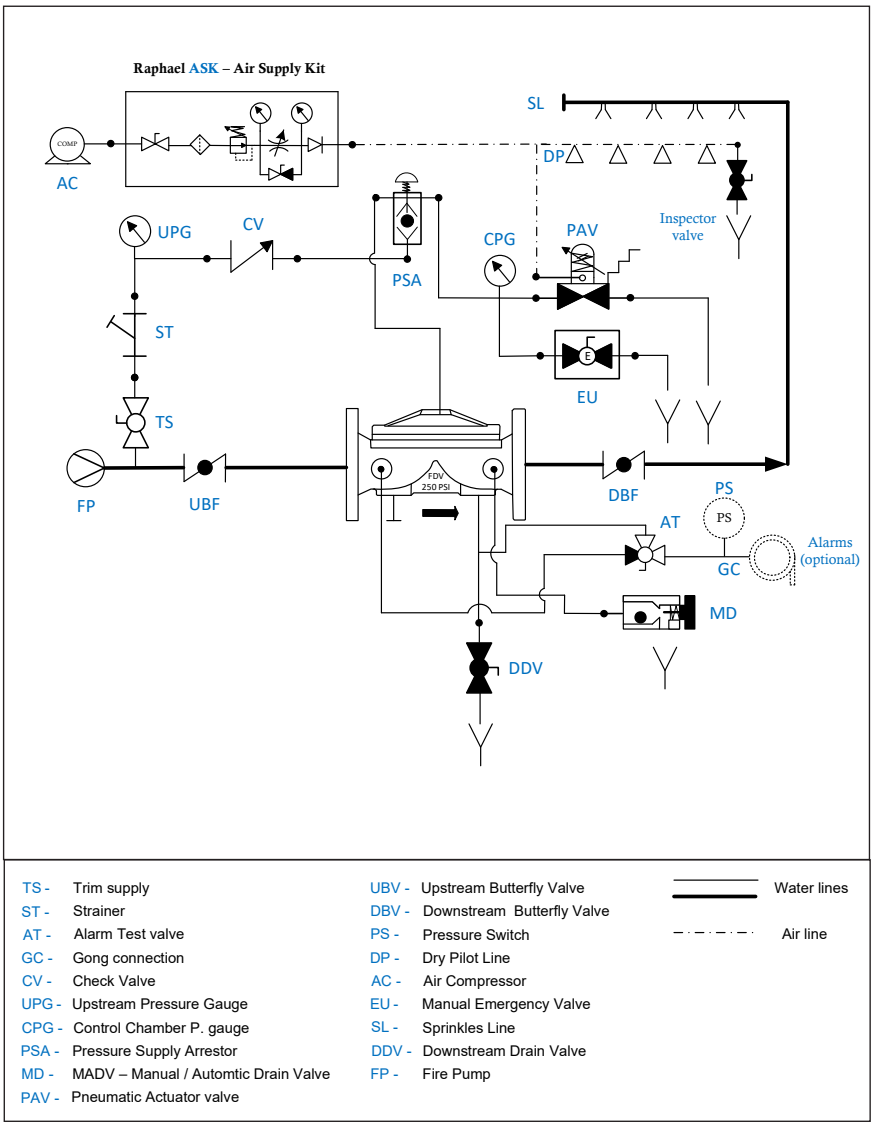

OPERATION

SET position

The pneumatic pressure accumulated in the Dry pilot line maintains the pneumatic actuator (PAV) close. Pressurized water in the valve's control chamber (DL) is trapped by the check valve (CV), the closed PSA [PSA], the closed emergency valve (EU) and by the closed actuator (PAV), maintains the FDV Deluge valve close.

FIRE situation

When some of the Dry Pilot detection line's automatic fire sprinklers are subjected to flames heat and shatter-open, the pilot detection line depressurizes the actuator [PAV] control chamber. Consequently, the actuator opens and drains the deluge valve's control chamber. The FDV deluge valve [DL] opens and admits water to the spray sprinklers line.

RESET position

System reset requires the replacement of all the shattered-open automatic fire sprinklers in the Dry Pilot detection line. The detection line is then pressurized together with the PAV actuator control chamber to reset it to the closed position. Pressurizing is performed by pushing the PSA push button [PSA]. Consequently, the FDV deluge valve's control chamber will be filled and pressurized, causing the valve to close.

Raphael reserves the right to change the contents without notice

FDV - DP0

Typical installation

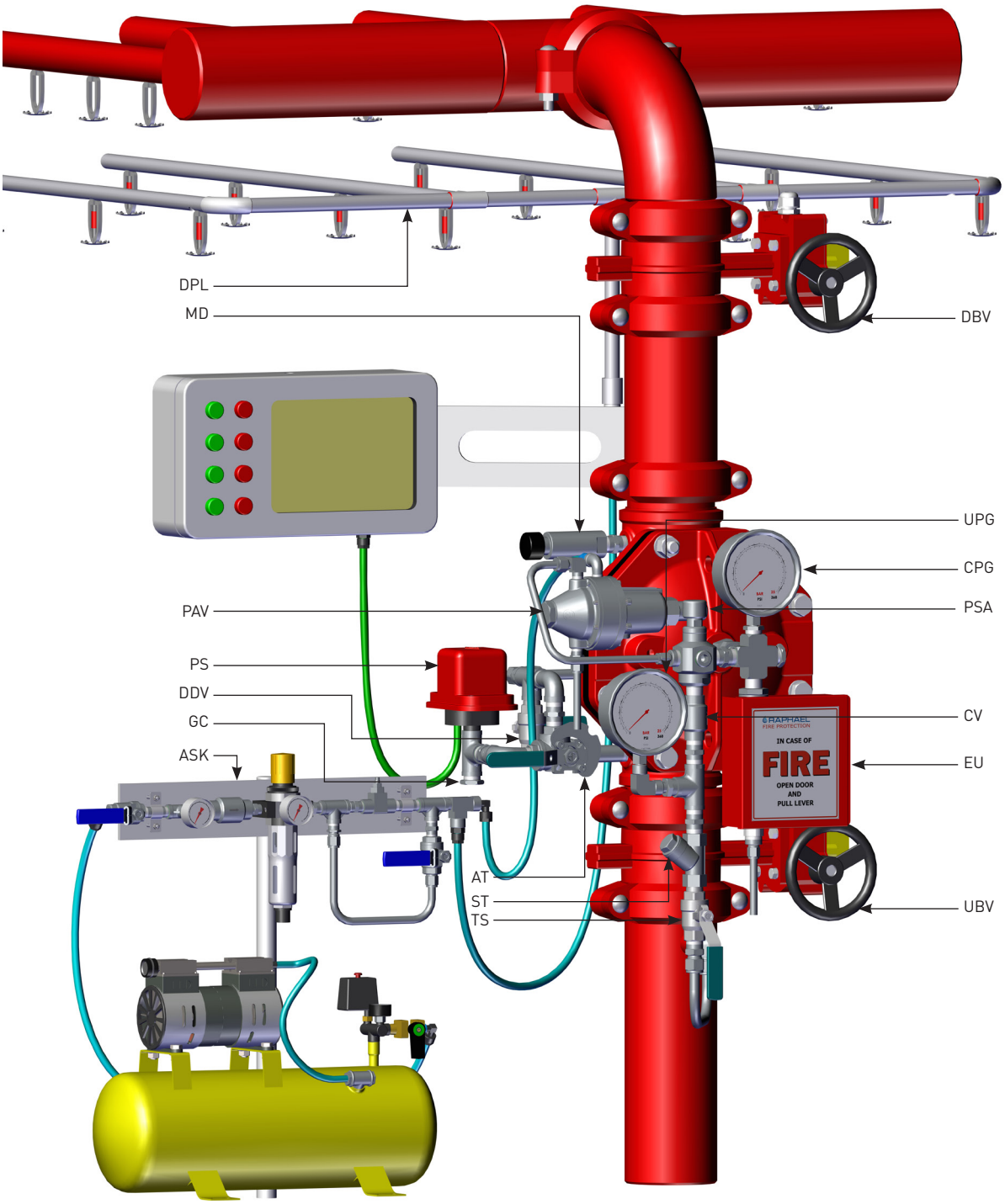

TS – Trim Supply
ST – Strainer
AT – Alarm Test valve
CV – Check Valve
GC – Gong Connection
DDV – Downstream Drain Valve

PS – Pressure Switch
PAV – Pneumatic Actuator Valve
PSA – Pressure Supply Arrestor
MD – Manual Automatic Drain Valve
ASK – Air Supply Kit
DPL – Dry Pilot Line

UPG – Upstream Pressure Gauge
CPG – Control chamber Pressure Gauge
UBV – Upstream Butterfly Valve
DBV – Downstream Butterfly Valve

Parametric drawing:

FDV-DP0

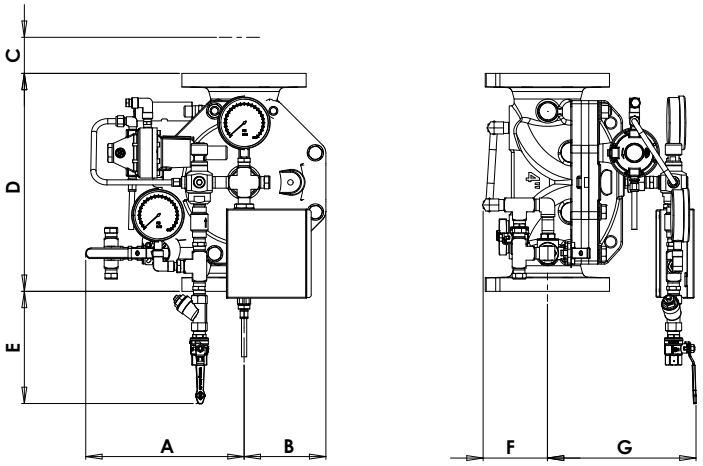

Dimensions Table

Size	1.5"		2"		3"		4"		6"		8"		10"	
	mm	inch	mm	inch	mm	inch	mm	inch	mm	inch	mm	inch	mm	inch
A	260	10.2	260	10.2	275	10.8	280	11	315	12.4	340	13.4	373	14.6
B	122	4.8	122	4.8	122	4.8	150	8.9	177	6.9	232	9.1	300	11.8
C	97	3.8	46	1.8	18.5	0.72	N/A	N/A	N/A	N/A	N/A	N/A	N/A	N/A
D	202	8	325	12.8	324	12.7	400	15.7	464	18.2	570	22.4	766	30.1
E	305	12	295	11.6	243	9.5	206	8.1	173	6.8	120	4.7	21	0.8
F	117	4.6	117	4.6	119	4.6	119	4.6	136	5.3	157	6.2	191	7.5
G	193	7.6	207	8.1	237	9.3	263	10.3	328	12.9	366	14.4	455	17.9
Kg/lb	12.6	27.6	14.3	31.5	31.5	69.5	47.2	104	58	128	103	227	232	511

Factory Standard

MAIN VALVE

BODY & COVER

- Ductile iron
- Cast Steel WCB
- Stainless Steel CF8
- Stainless Steel CF8M
- Nickel Aluminum Bronze

ELASTOMERS:

- NR, fabric reinforced Natural Rubber
- EPDM, fabric reinforced
- NBR, fabric reinforced Nitrile Rubber

COATING:

- Base layer – high built Epoxy FBE
  Top layer – electrostatic Polyester powder RAL 3000
- Rilsan Polyamide based (Nylon 11)
- Internal – vitreous Enamel
  External – Epoxy/Polyester powder RAL 3000

TRIM

PIPING & TUBING:

- Stainless Steel 316
- Copper/Brass
- Cupro-Nickel
- Monel®

FITTINGS:

- Stainless Steel 316
- Brass
- Super Duplex
- Cupro-Nickel
- Monel®

ACCESSORIES:

- Stainless steel CF8M / 316
- Brass
- Nickel Aluminum Bronze
- SMO-245
- Monel®

PLEASE SPECIFY

- Working Media
- Ambiental conditions
- Min/Max operating flow
- Min/Max operating pressure
- Pneumatic working pressure
- System installation orientation
- Deluge valve ends and standard
- Deluge valve material and coating
- Trim materials.
- Additional accessories needed

For more detailed technical information, please refer to chapter Engineering Data.

Raphael reserves the right to change the contents without notice