IOM FDV-DH1

HYDRAULICALLY ACTUATED, REMOTE RESET, DELUGE VALVE

Installation Operation & Maintenance manual

Fire Protection

RAPHAEL VALVES INDUSTRIES

RAPHAEL FP

IOM FDV-DH1

Hydraulically Actuated, Remote Reset, Deluge Valve

DESCRIPTION



This deluge system is based on Raphael's FDV valve, equipped with a hydraulically actuated control trim. The installed FDV valve is available with a range of optional materials and coatings to meet the required operating conditions, but the system's functional principle remains unchanged.

In a fire situation, pressurized water in the wet pilot detection system is released through one or more automatic sprinklers that open due to heat. As a result, the pressurized water trapped in the FDV control chamber drains through the vented wet pilot pipeline, and the FDV valve opens.

This system is suitable for water spray pipelines with open nozzles.

The maximum wet pilot height should be determined based on pilot line length calculations that consider the hydrostatic pressure caused by the columnning phenomenon.

RAPHAEL FP

PARTS LIST

Hydraulically Actuated, Remote Reset, Deluge Valve

1. Upstream pressure gauge
2. MADV (MB) Drain valve
3. Pressure switch (Optional) (1/2” NPT female).
4. Downstream drain valve
5. Water motor alarm conn. (1/2” NPT female).
6. Alarm test valve (3 way)
7. “Y” Strainer
8. Trim Pressure Supply Valve
9. Needle valve
10. Wet pilot’s conn. Port (1/2” NPT female)
11. Deluge valve
12. Control chamber pressure gauge
13. MEU Manuel emergency unit
14. Check valve
15. Upstream drain (Plugged)

Fig. 1

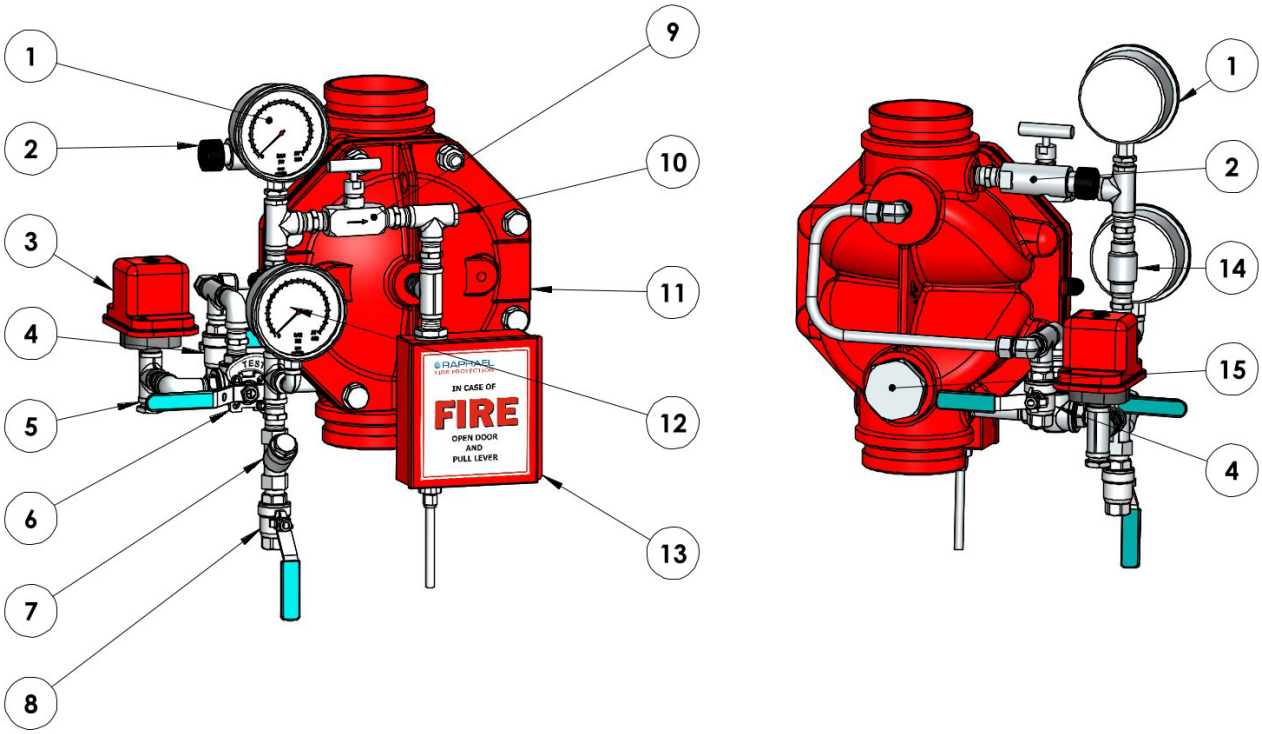

OPERATION (Reference Figure 1)

SET position:

Water is supplied through the trim pressure supply valve (**8**), the Y strainer (**7**), the check valve (14) and the needle valve (**9**). The water fills the FDV control chamber as well as the wet pilot line. Pressurized water in the control chamber is trapped by the check valve (**14**), the automatic sprinklers located along the wet pilot line and the closed MEU emergency valve (**13**), keeping the deluge valve in the closed position.

FIRE situations:

When one or more automatic sprinklers on the wet pilot line are exposed to fire, they open and release pressure to the atmosphere. The FDV control chamber drains through the opened pilot sprinkler or sprinklers, and the pressure drop opens the deluge valve.
Opening the MEU door and pulling down the ball valve handle bypasses all conditions, drains the FDV control chamber and opens the valve immediately.

RESET position.

The first step in the trim reset procedure is to close the upstream butterfly valve (**11**, figure 2). This stops the flow from the open sprinklers and allows their replacement.
When replacement is complete, the upstream butterfly valve must be opened. Upstream water flows into the wet pilot line through the needle valve and simultaneously into the FDV control chamber. As a result, the FDV valve closes.
It is recommended to drain the sprinkler pipeline by opening the ball valve connected to the FDV downstream drain ball valve (**4**), or through the MADV (MB) (**2**).

RAPHAEL FP

INSTALLATION (Reference Figure 2)

1. This system is supplied pre-assembled and factory pre-adjusted. Any change carried out at the system's trim components order, pipes and tubes length or ports for axillary connection sizes, will affect the system operation and therefore, prohibited.

2. The system cannot be installed at a location where it might be subjected to freezing temperatures.

3. maintaining sufficient room around the system location ensures operational safety, and ease of maintenance.

4. It should be considered that water will be drained during regular maintenance on a routine base, during periodical tests procedures and when operating in fire situation. Therefore, a drainage plan should be considered.

5. The system described is to be mounted vertically only. Systems with identical operation but for horizontal installation are marked with a prefix "H", e.g. HFDV-DH1.

6. The downstream pipe connected to the FDV valve at Vertical and horizontal mount system, is to be supported firmly to prevent the pipeline's weight to be loaded on the system's valve.

7. Any use of pipe/thread reduction-fittings installed at open ports designated for axillary components, (like water motor alarm, trim pressure supply, FDV valve's drains), is prohibited.

8. All connections to water supply, should be done in accordance with figure 2
   (**1**) – Trim pressure supply connection - ½" NPT female.
   (**4**) – Alarm gong to alarm test valve - ½" NPT female.
   (**14**) – Wet pilot line connection – ½" NPT female (temporary plugged).

9. The FDV valve should be installed with the flow arrow marked on the valve's body, in the proper direction.

10. Before performing the high-pressure leak test, make sure that the butterfly valve or the OS&Y valve upstream of the deluge valve is closed, in order to prevent damage to the diaphragms in the valve and in the trim components.

11. Make sure that the gong connected to its designated outlet is supported so that its weight, along with the weight of the piping attached to it, is not applied to the valve trim.

INSTALLATION PARTS LIST (Reference Figure 2)

Hydraulically Actuated, Remote Reset, Deluge Valve

1. Trim supply valve (1/2” NPT female).
2. Y Strainer.
3. 3-way alarm test valve.
4. Water Motor Alarm connection (1/2” NPT female, plugged).
5. Downstream drain valve (1/2” NPT female).
6. Pressure switch *****. (½” NPT female connection).
7. Upstream pressure gauge.
8. MADV – Manual Automatic Drain Valve (MB).
9. Main control board.
10. Wet pilot line.
11. Downstream separation valve (butterfly or OS&Y valves).
12. Control chamber pressure gauge.
13. Needle valve.
14. Wet pilot line connection port (1/2” NPT female).
15. MEU - Manual Emergency Unit.
16. Upstream separation valve (butterfly or OS&Y valves).

**** Optional***

RAPHAEL FP

Fig. 2

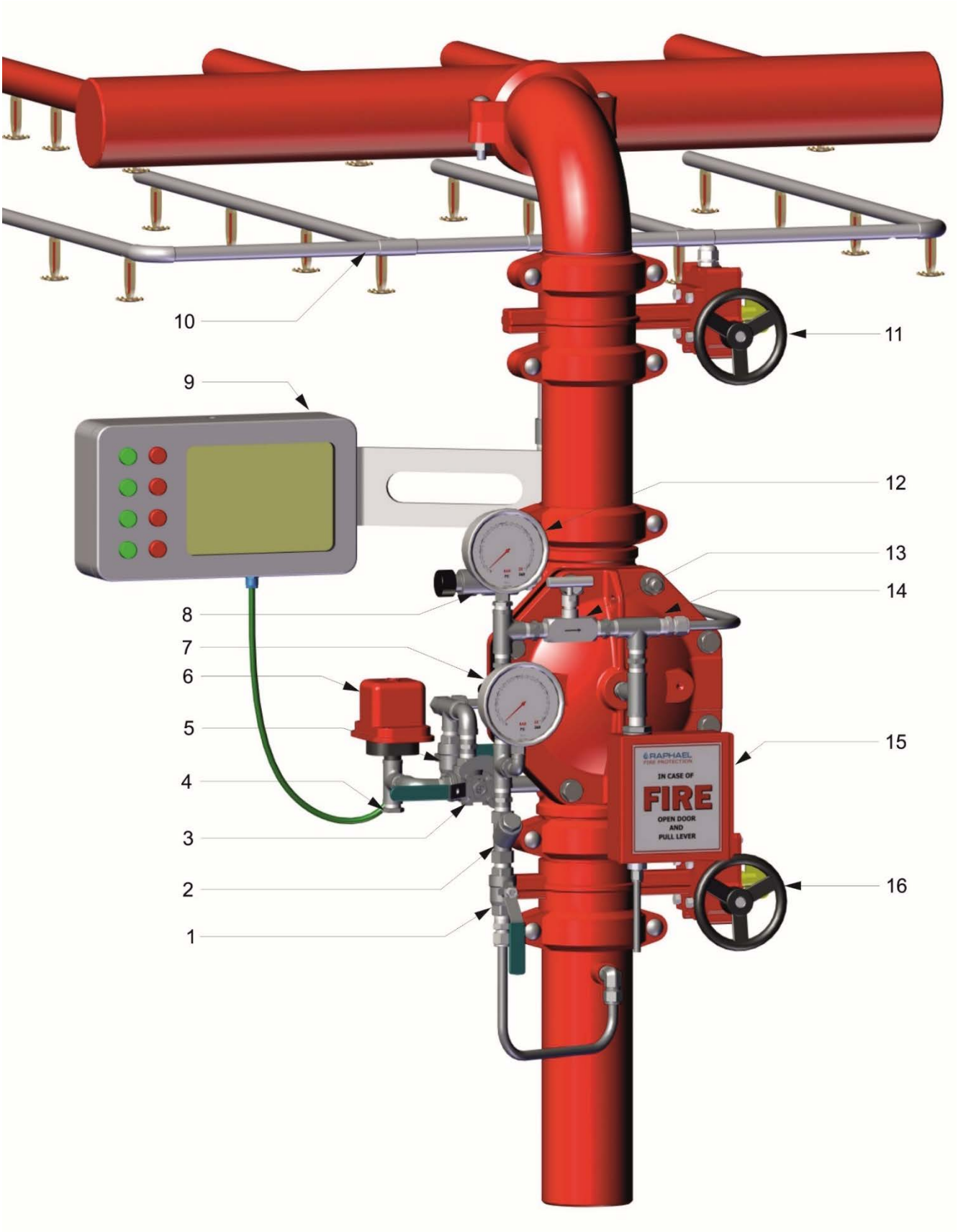

RAPHAEL FP

OPERATING INSTRUCTIONS (Reference Drawing - figure 2)

Commissioning the system - Phase 1

Filling and pressurizing the system.

The procedure described should be carried out after system installation completion and a comprehensive inspection. (Reference Drawing - figure 2)

1. The filling process is performed only after flushing the pipeline. The flushing needs to be done when both butterfly valves (**11** & **16**) are open, and the trim supply valve (**1**) is closed.

2. Make sure the downstream separation butterfly or OS&Y (**11**) is fully close.

3. Make sure the trim pressure supply ball valve (**1**) is closed.

4. Make sure that MEU door (**15**) is fully closed. If open – turn valve's lever upwards and close the door.

5. Open the inspector's valve located at the very end of the wet pilot's pipeline (**10**).

6. Open the trim pressure supply valve (**1**). Let water flow out of the inspector's valve until a clear flow, free of air bubbles, is observed.

7. Close the inspector's valve and pressurize the trim, the FDV's control chamber and the wet pilot line. Make sure the FDV's downstream drain valve (**5**) is open and upstream drain valve (if equipped) is closed.

8. Open gradually the upstream separation butterfly valve (**16**) and make sure the downstream drain valve (**5**) is not dripping.

9. If ok, close the Downstream drain valve (**5**).

The system is ready for the "**fire situation simulation**".

RAPHAEL FP

Commissioning the system - phase 2.

Fire Situation Simulation

The procedure described, should be carried out after the system was pressurized and a comprehensive leakage inspection was commissioned.
Energizing the solenoid can simulate a fire situation and cause the system to response by opening the FDV deluge valve.

NOTICE:
Prior to any stoppage of the fire protection system, a fire patrol should be placed in the area covered by the interrupted system.
Prior to generating any test procedures, turning on false alarms or turning off the alarm system, the local safety personnel and the close central fire station must be reported.

1. Make sure that the downstream butterfly valve (**11**) is close.

2. open downstream drain valve (**5**).

3. Open the inspector's valve (at the end of the dry pilot line **10** – not illustrated) and drain the pilot line. The pilot's pressure drop will cause the FDV deluge control chamber to be drained through the open inspector's valve and consequently, the FDV deluge valve will open.

4. Observe the downstream drain valve (**5**): A significant stream of water should flow out of this valve. If ok. -

The system is ready for re-setting and placing in service.

RAPHAEL FP

Commissioning the system - phase 3.

Resetting & placing in service

The procedure described, should be carried out after any periodic operational test - simulated or real fire situation. After a real fire situation, replace all blown-open sprinklers before pressurizing the pilot line.

Resetting after a Fire Situation <u>Simulation</u>:

1. Close the Upstream Butterfly valve (**16**)
2. Close the trim pressure supply (**1**).
3. Close the inspector's valve (at the end of wet pilot line **10**).
4. Disassemble the "Y" strainer (**2**) and clean its screen. Re-assemble the strainer.
5. Open the trim pressure supply valve (**1**). Observe the pressure increase and make sure both pressure gauges **7** & **6** show the same reading.
6. Fiest, the Upstream Butterfly valve (**3**) and then the downstream butterfly valve (**7**) need to be opened gradually. There should be no flow and no dripping through the downstream drain valve (**5**). If ok, close this valve.

Resetting after a <u>Real</u> Fire Situation:

1. Close the Upstream Butterfly valve (**16**)
2. Close the trim pressure supply (**1**).
3. All the Dry pilot line's blown-open sprinklers need to be replaced (**10**).
4. Disassemble the "Y" strainer (**2**) and clean its screen. Re-assemble the strainer.
5. Open the trim pressure supply valve (**1**). Observe the pressure gauges **7** & **6**: its reading needs to be the same.
6. Fiest, the Upstream Butterfly valve (**3**) and then the downstream butterfly valve (**7**) need to be opened gradually. There should be no flow and no dripping through the downstream drain valve (**5**). If ok, close this valve.

The system is in SET state and placed in service.

MAINTENANCE

Prior to any stoppage of the fire protection system, a fire patrol should be placed in the area covered by the interrupted system.
Prior to generating any test procedures, turning on false alarms or turning off the alarm system, the local safety personal and the close central fire station must be notified.

The Maintenance and inspection procedures are based on the relevant chapters at the NFPA 25.

Daily Inspection

Make sure that the deluge valve's heating system (If equipped), functions correctly and that the Fire protection valve surrounding temperature is 4°C min.

Monthly Inspection

1. Observe the FDV valve for external damage: observe the piping and hose connections for leakage or damage.

2. Verify that the upstream butterfly valve (**16**) and the Trim pressure supply valve (**1**) are in fully open position.
   Downstream drain valve (**5**) and upstream drain valve (if equipped) are fully close.

3. Observe the FDV control chamber pressure gauge (**12**) and the upstream pressure gauge (**7**) make sure that its readings are the same and that the required supply water pressures are applied to the deluge Valve inlet and trim.

4. Press the MADV drain valve and drain condensed water. In case a constant dripping or leakage is observed, it might indicate a deluge valve sealing problem.

5. Move the 3-way SET/TEST valve (**3**) to TEST. The acoustic alarm should sound, and the alarm pressure switch (**6**) should transmit a signal to the main control board.

RAPHAEL FP

Annual test procedure

1. Conduct the monthly test & inspection procedure.

2. Perform the procedure described in chapter - **Commissioning the system - phase 2. -** Fire Situation Simulation. Check the system's proper operation.

3. Follow the procedure described in chapter - **Commissioning the system - phase 3.** - Resetting & placing in service, chapter ***Resetting after a Fire Situation Simulation.***

Every 5 years inspection procedure

This major inspection and maintenance procedure includes the removal of the trim, the dismantling of the FDV's valve cover and a performance of a comprehensive internal part examination. Then, the relevant trim accessories should be replaced, After the completion, the Annual maintenance procedure is to be conducted.

1. Close the upstream butterfly valve (**16**) and the trim pressure supply valve (**1**).
2. Open the downstream drain valve (**5**) and the upstream drain valve if equipped. Drain the FDV's control chamber using the EMU Emergency valve (**15**).
3. Turn off and disconnect all relevant electrical circuits (pressure switch cable)
4. Release all relevant tubes fitting nuts and the central union pipe connection (if equipped) at valve's cover center.
5. Remove the disassembled front trim.
6. Remove all the FDV's cover bolts. The cover will hang on its studs. Release both nuts and remove the cover carefully. (relevant to valve size 4" and on)
7. Observer the internals of the valve and cover for excessive scale residuals, foreign particles, damaged coating (rust, cracks, or pealing).
8. Worn or damaged parts should be replaced. Consult Raphael's local representative or the service department for any maintenance issue or part replacement issue.

RAPHAEL FP

9. Replace the Diaphragm. The identification tongue should point to the valve's stamped size (diameter in inch) side.

10. Reinstall the valve's cover: use the Anti-seize paste tube supplied in the maintenance kit for bolts and nuts pre-installation lubrication. Tight it in accordance with **"Bolt's torque moments table".**

11. Reinstall the front trim carefully: avoid causing twists or dents on bent tubes and do not overtight the compression fitting's nuts.

12. When the system is fully re-assembled, perform the "**Commissioning the system - phase 1** - Filling and pressurizing the system" procedure.

13. Perform the **Annual test procedure.**

Bolt's Torque Moments Table

Valve size	1.5"	2"	2.5"	3"	4"	6"	8"	10"
Torque lb/ft	22	29	36	54	65	72	87	118

Equivalent pipe length for FDV deluge valves

Valve size		1.5"	2"	2.5"	3"	4"	6"	8"	10"
Equivalent length	ft	11	24	25	28	31	46	72	117
value	m	3.6	7.3	7.6	8.5	9.4	14	21.9	35.6

RAPHAEL FP

MARKING

The FDV valves are marked by a laser engraved, black anodized, 0.8mm (0.031”) thick metal plate, riveted to the valve’s cover.

- *Company name and trademark.*
- *Short description (Italic letters)*
- *Application’s type*: FDV-DH1 – Hydraulic actuated Remote Reset.
- (P/N) *The Application’s part number*: System properties–Valve properties
- *Rated pressure*: 250 psi
- *Equivalent Length: reference table - page 13.*
- *Serial Number*: Work order number-MM-YY-Number in batch 01-99
- *The UL listing mark & QR code:* EXxxxxx
- *The FM approved mark*
- *The Application’s* diameter in inch: XX”

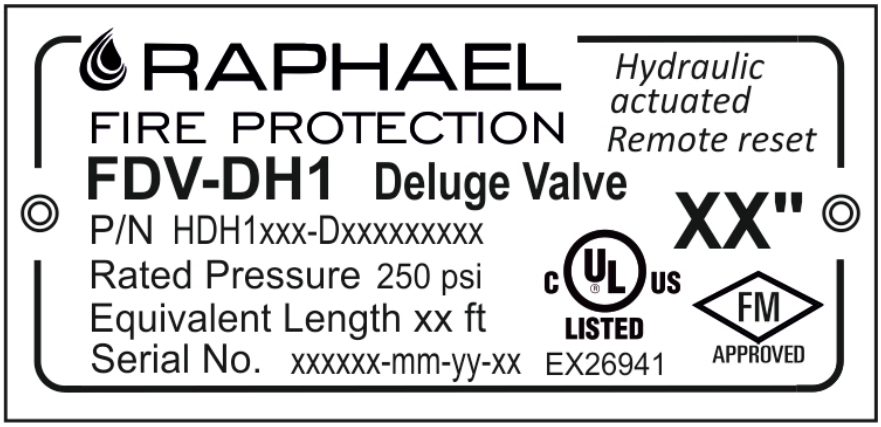

RAPHAEL FP

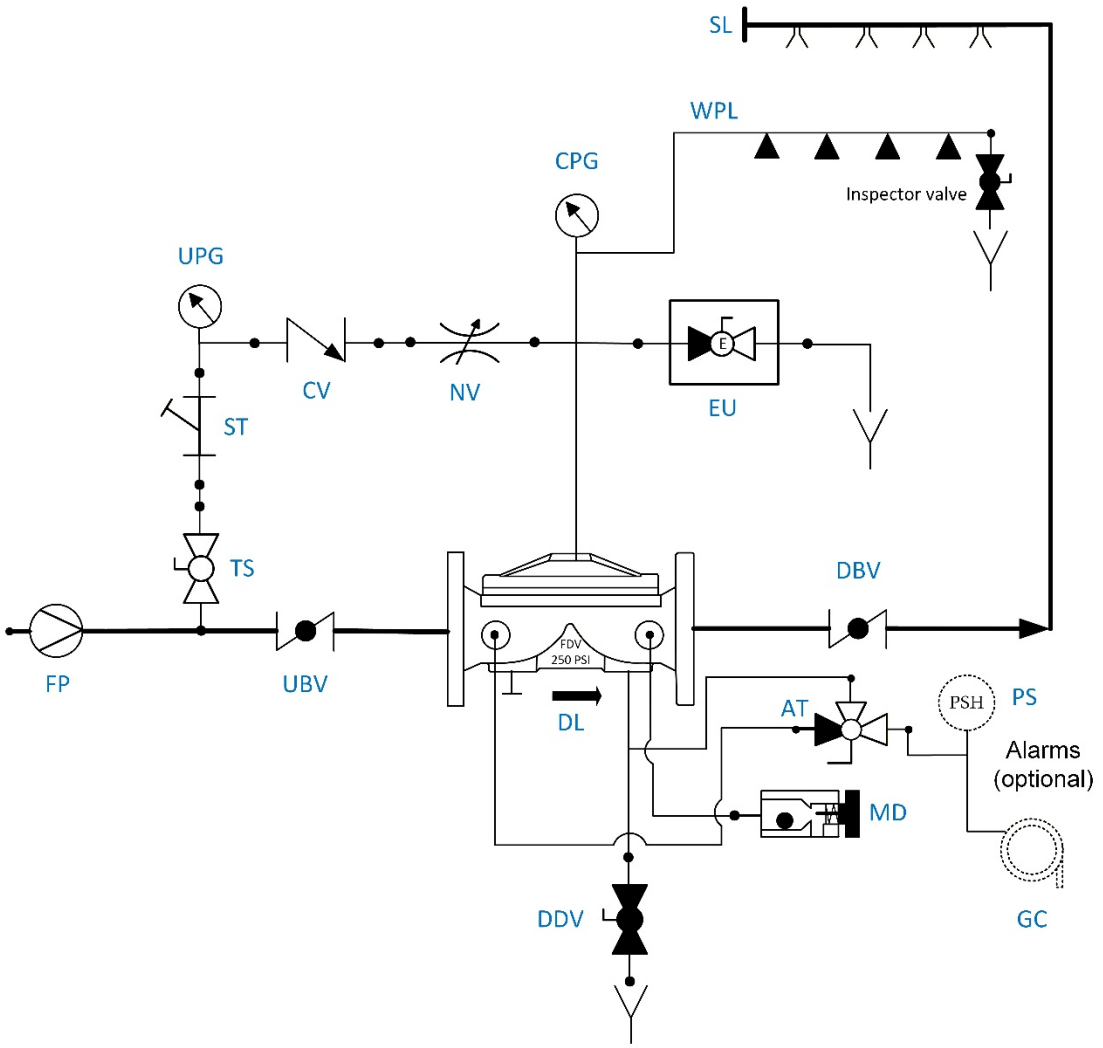

TS - Trim supply
ST - Strainer
AT - Alarm Test valve
GC - Gong connection
CV - Check Valve
NV - Needle Valve
PS - Pressure Switch (optional)
DL - Deluge Valve
MD - MADV – Manual / Automtic Drain Valve
WPL - Wet Pilot Line

UBV - Upstream Butterfly Valve
DBV - Downstream Butterfly Valve
CPG - Control Chamber P. gauge
UPG - Upstream Pressure gauge
EU - Manual Emergency Valve
SL - Sprinkles Line
DDV - Downstream Drain Valve
FP - Fire Pump

Water lines

RAPHAEL, founded in 1949, is the first Israeli manufacturer of water control valves. RAPHAEL´s research department constantly strives to introduce new and innovative products and solutions for water control systems including water works, fire-protection and irrigation systems.



RAPHAEL

RAPHAEL Valves Industries (1975) Ltd.

North Industrial Zone Or Akiva, 3063927 P.O.Box 555, Israel

Tel. +972 4 6263555 | info@raphael-valves.com | raphael-valves.com

Nov-25