Hydraulically Actuated, Remote Reset Deluge Valve

FDV - DH1

The FDV is a Fire Protection control valve for Deluge fire sprinkler systems, designed for installations in hazardous environments.

The FDV-DH1 Deluge system is actuated hydraulically and resets remotely.

When the Wet pilot detection line's automatic fire sprinklers are subjected to flame heat and shatter-open, it enables the FDV control chamber to drain and de-pressurize, opening of the deluge valve and admitting water into the spray sprinkler system. The Deluge system incorporates an emergency valve, bypassing the fire detection system for manual operation.

Designed for vertical or horizontal installation, a globe pattern, line pressure operated FDV-DH1 valve features a direct elastomeric diaphragm seal. It has no balancing spring or internal metallic wet components in the valve body. The hydrodynamic pattern design, ensures high flow rates with minimum head loss.



MARKETS

Marine | P.O.G. | Airports

TECHNICAL DATA

FLUID:
Water, Brackish water, Sea water, Foam

SIZE RANGE:
40mm to 250mm (1½'' to 10")

AVAILABLE CONNECTIONS ENDS:
Flange*Flange, Groove*Groove, Flange*Groove, Groove*Flange, Thread*Thread

PRESSURE NOMINAL:
250 psi (17.2 bar)

APPROVALS

ADVANTAGES

- Ony three parts: body, diaphragm & cover plate. No wet metal spring inside the control chamber.
- Unobstructed full bore valve.
- Simple manual reset of the valve to standby position without closing OS & Y or other valves in the system.
- Open fail safe valve, maintained in standby closed position.
- Low maintenance cost: the valve is serviced in-line with only one replaceable part which is long life elastomeric diaphragm.
- Conforms with inspection, testing and maintenance standards of water based fire protection systems, NFPA 25.

CHARACTERISTICS

- Hydro-dynamic pattern design ensures high flow rates with minimum head loss.
- The valve trips open automatically upon a gradual release of water pressure from its control chamber. The trip is actuated by a Wet Pilot Line's hydraulic pressure release due to its exposure to flame heat.
- Soft closing upon pressurization of the valve's control chamber, by line pressure or other independent water source, prevents surge.

The FDV-DH1 resets to stand-by close position by pressurizing the Wet Pilot Line.

Schematic drawing: FDV-DH1

Set position

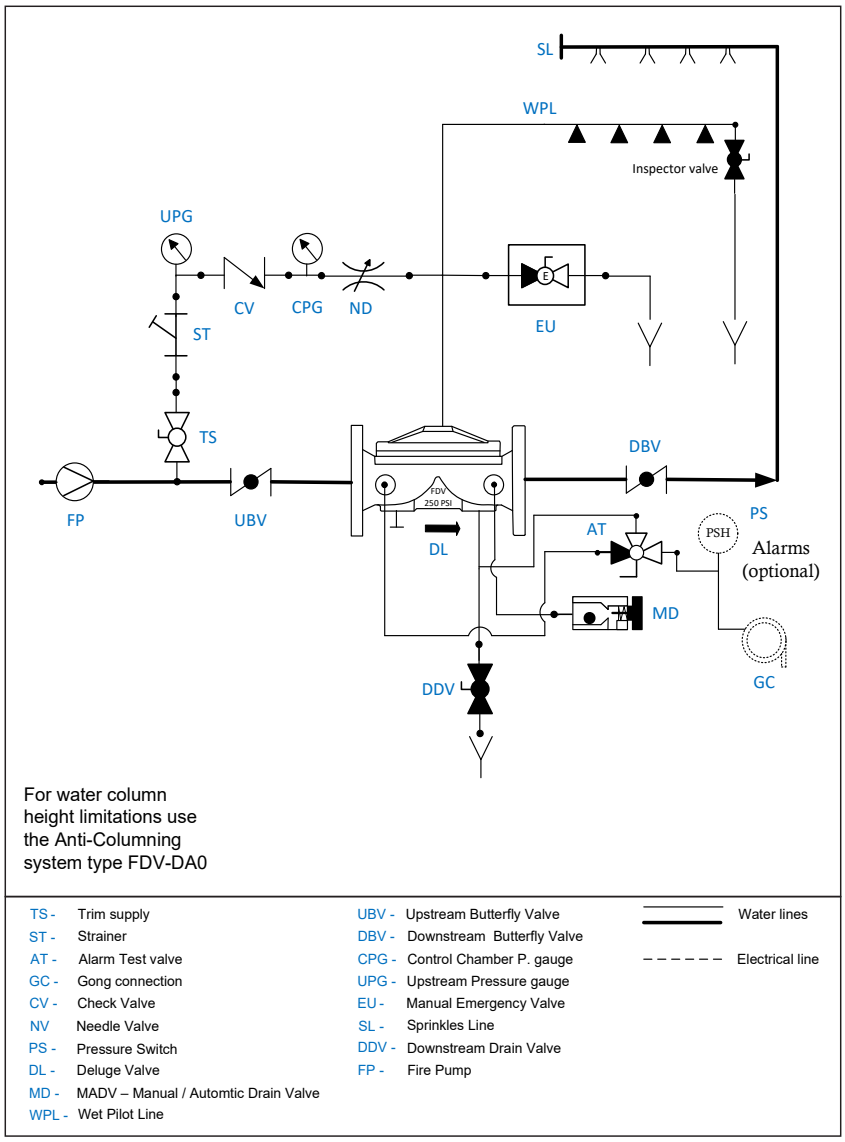

TS -	Trim supply	UBV -	Upstream Butterfly Valve		Water lines
ST -	Strainer	DBV -	Downstream Butterfly Valve		
AT -	Alarm Test valve	CPG -	Control Chamber P. gauge		Electrical line
GC -	Gong connection	UPG -	Upstream Pressure gauge		
CV -	Check Valve	EU -	Manual Emergency Valve		
NV	Needle Valve	SL -	Sprinkles Line		
PS -	Pressure Switch	DDV -	Downstream Drain Valve		
DL -	Deluge Valve	FP -	Fire Pump		
MD -	MADV – Manual / Automtic Drain Valve				
WPL -	Wet Pilot Line				

OPERATION

SET position

Pressurized water in the valve's control chamber (DL) is trapped by check valve (CV), The closed emergency valve (EU) and by the automatic springers on the wet pilot line (WPL), maintaining the FDV deluge valve (DL) closed.

FIRE situation

When some of the Wet pilot detection line's automatic fire sprinklers are subjected to flames heat and shatter-open, it depressurizes and the FDV deluge valve (DL) control chamber. Consequently, The FDV deluge valve opens and admits water to the spray sprinklers line.

RESET position

System reset requires the replacement of all the wet pilot line (WPL) detection Line's shattered-open automatic fire sprinklers.

The detection line need to be pressurized, and consequently. The FDV valve control chamber is pressurizes as well and the valve closes.

Raphael reserves the right to change the contents without notice

FDV - DH1

Typical installation

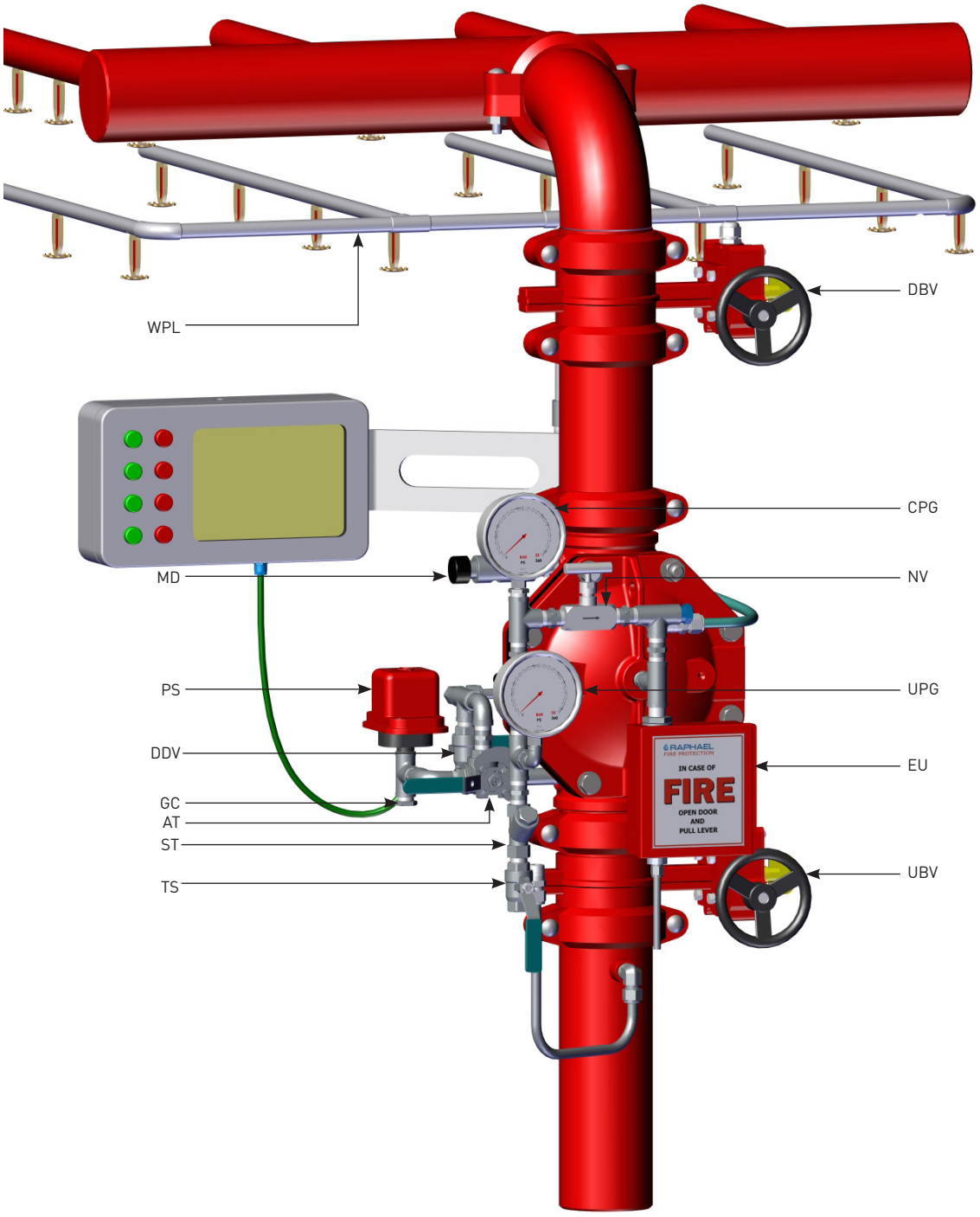

TS – Trim Supply
ST – Strainer
AT – Alarm Test valve
GC – Gong Connection
DDV – Downstream Drain Valve
PS – Pressure Switch

NV – Needle Valve
MD – Manual Automatic Drain Valve
WPL – Wet Pilot line
UPG – Upstream Pressure Gauge

CPG – Control chamber Pressure Gauge
UBV – Upstream Butterfly Valve
DBV – Downstream Butterfly Valve
EU – Emergency Unit

Parametric drawing:

FDV-DH1

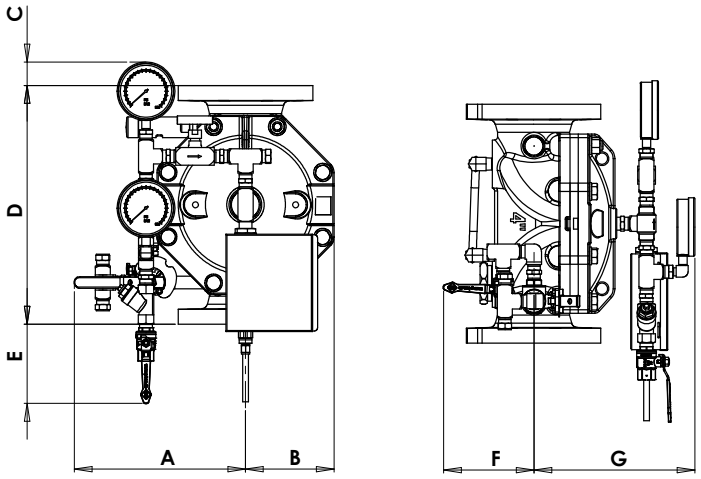

Dimensions Table

Size	1½", 2"		3"		4"		6"		8"		10"	
	mm	inch	mm	inch	mm	inch	mm	inch	mm	inch	mm	inch
A	246	11.8	268	10.5	280	11	305	12	332	13	365	14.4
B	250	9.8	330	13	284	11.2	404	16	431	17	308	12
C	97	3.8	87	3.4	75.5	2.9	67	2.6	67	2.6	NA	NA
D	202	7.9	325	12.8	396	15.5	464	18.3	567	22.3	768.5	30.2
E	208	8	160	6.3	93	3.6	98	3.8	91	3.6	NA	NA
F	98	3.8	116	4.5	198	7.8	233	9	246	9.7	203	8
G	243	9.5	233	9.2	263	10.3	326	12.8	361	14.2	472	18.6
Kg/lb	9	20	22	48	44	97	66	145	107	236	227	500.5

Factory Standard

MAIN VALVE

BODY & COVER

- Ductile iron
- Cast Steel WCB
- Stainless Steel CF8
- Stainless Steel CF8M
- Nickel Aluminum Bronze

ELASTOMERS:

- NR, fabric reinforced Natural Rubber
- EPDM, fabric reinforced
- NBR, fabric reinforced Nitrile Rubber

COATING:

- Base layer – high built Epoxy FBE
  Top layer – electrostatic Polyester powder RAL 3000
- Rilsan Polyamide based (Nylon 11)
- Internal – vitreous Enamel
  External – Epoxy/Polyester powder RAL 3000

TRIM

PIPING & TUBING:

- Stainless Steel 316
- Copper/Brass
- Cupro-Nickel
- Monel®

FITTINGS:

- Stainless Steel 316
- Brass
- Super Duplex
- Cupro-Nickel
- Monel®

ACCESSORIES:

- Stainless steel CF8M / 316
- Brass
- Nickel Aluminum Bronze
- SMO-245
- Monel®

PLEASE SPECIFY

- Working Media
- Ambiental conditions
- Min/Max operating flow
- Min/Max operating pressure
- System installation orientation
- Deluge valve ends and standard
- Deluge valve material and coating
- Trim materials
- Pilot line installation height
- Additional accessories needed

For more detailed technical information, please refer to chapter Engineering Data.

Raphael reserves the right to change the contents without notice