Hydraulically Actuated, Local reset Deluge Valve

FDV - DH0

The FDV-DH0 fire protection system is based on Raphael's FDV deluge valve and is equipped with a hydraulically controlled trim. The FDV is a fire protection control valve for deluge sprinkler systems, specifically designed for installation in hazardous environments. It is suitable for both vertical and horizontal installations and features a globe-pattern, line-pressure-operated design with a direct elastomeric diaphragm seal. The valve contains no balancing spring and has no internal metallic components in the wetted area. Its hydrodynamic flow path ensures high flow rates with minimal head loss.

The FDV-DH0 deluge system is hydraulically actuated and can be locally reset. In a fire situation, when the wet pilot detection line is exposed to flame heat, one or more automatic sprinklers shatter, releasing pressure from the deluge control chamber and causing the deluge valve to open.

The system incorporates an emergency valve that bypasses the fire detection system for manual operation. Additionally, the trim is equipped with a PSA - a device that enables local system reset by repressurizing the control chamber and closing the FDV valve.

The system is suitable for use with automatic sprinklers on the wet pilot pipeline and with open nozzles on the main spraying pipelines.



MARKETS

Marine · Commercial · Residential · P.O.G. · Airports

TECHNICAL DATA

FLUID:
Water, Brackish water, Sea water, Foam

SIZE RANGE:
40mm to 250mm (1½'' to 10")

AVAILABLE CONNECTIONS ENDS:
Flange*Flange, Groove*Groove, Flange*Groove, Groove*Flange, Thread*Thread

PRESSURE NOMINAL:
250 psi (17.2 bar)

APPROVALS

ADVANTAGES

- Ony three parts: body, diaphragm & cover plate. No wet metal spring inside the control chamber.
- Unobstructed full bore valve.
- Simple manual reset of the valve to standby position without closing OS & Y or other valves in the system.
- Open fail safe valve, maintained in standby closed position.
- Low maintenance cost: the valve is serviced in-line with only one replaceable part which is long life elastomeric diaphragm.
- Conforms with inspection, testing and maintenance standards of water based fire protection systems, NFPA 25.

CHARACTERISTICS

- Hydro-dynamic pattern design ensures high flow rates with minimum head loss.
- The valve trips open automatically upon a gradual release of water pressure from its control chamber. The trip is actuated by a Wet Pilot Line's hydraulic pressure release due to its exposure to flame heat.
- Soft closing upon pressurization of the valve's control chamber, by line pressure or other independent water source to prevent surges.
-

The FDV-DH0 resets to stand-by close position by pressurizing the Dry Pilot Line and manually operating the PSA device.

Schematic drawing: FDV-DH0

Set position

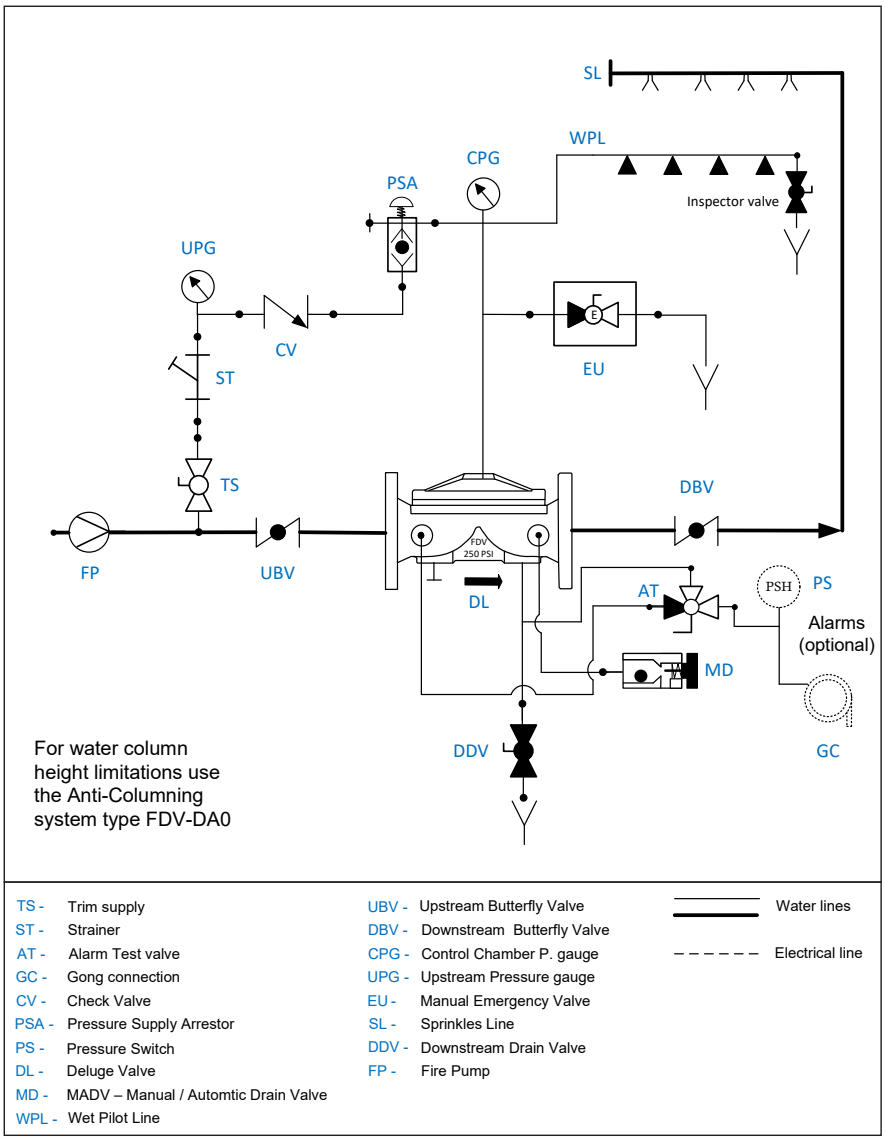

TS -	Trim supply	UBV -	Upstream Butterfly Valve		Water lines
ST -	Strainer	DBV -	Downstream Butterfly Valve		Electrical line
AT -	Alarm Test valve	CPG -	Control Chamber P. gauge		
GC -	Gong connection	UPG -	Upstream Pressure gauge		
CV -	Check Valve	EU -	Manual Emergency Valve		
PSA -	Pressure Supply Arrestor	SL -	Sprinkles Line		
PS -	Pressure Switch	DDV -	Downstream Drain Valve		
DL -	Deluge Valve	FP -	Fire Pump		
MD -	MADV – Manual / Automtic Drain Valve				
WPL -	Wet Pilot Line				

OPERATION

SET position

Pressurized water in the valve's control chamber is trapped by the closed PSA [PSA], the closed emergency valve [EU] and by the closed automatic Wet Pilot detection Line [WPL]. The hydraulic pressure accumulated in the Wet pilot detection line, maintains the FDV deluge valve [DL] closed.

FIRE situation

When the Wet pilot detection line's [WPL] automatic fire sprinklers are subjected to flame heat and shatter-open, it enables the FDV control chamber to drain and de-pressurize. Consequently, the deluge valve will open admitting water into the spray sprinkler system. The Deluge system incorporates an emergency valve, bypassing the fire detection system for manual operation.

RESET position

System reset requires a replacement of all shattered-open wet pilot detection line's automatic fire sprinklers. The wet pilot line is then pressurized by the upstream pressure. The PSA [PSA] push button should be pressed to enable upstream pressure passage to pressurize the Pilot line and close the FDV's main valve.

Raphael reserves the right to change the contents without notice

FDV - DH0

Typical installation

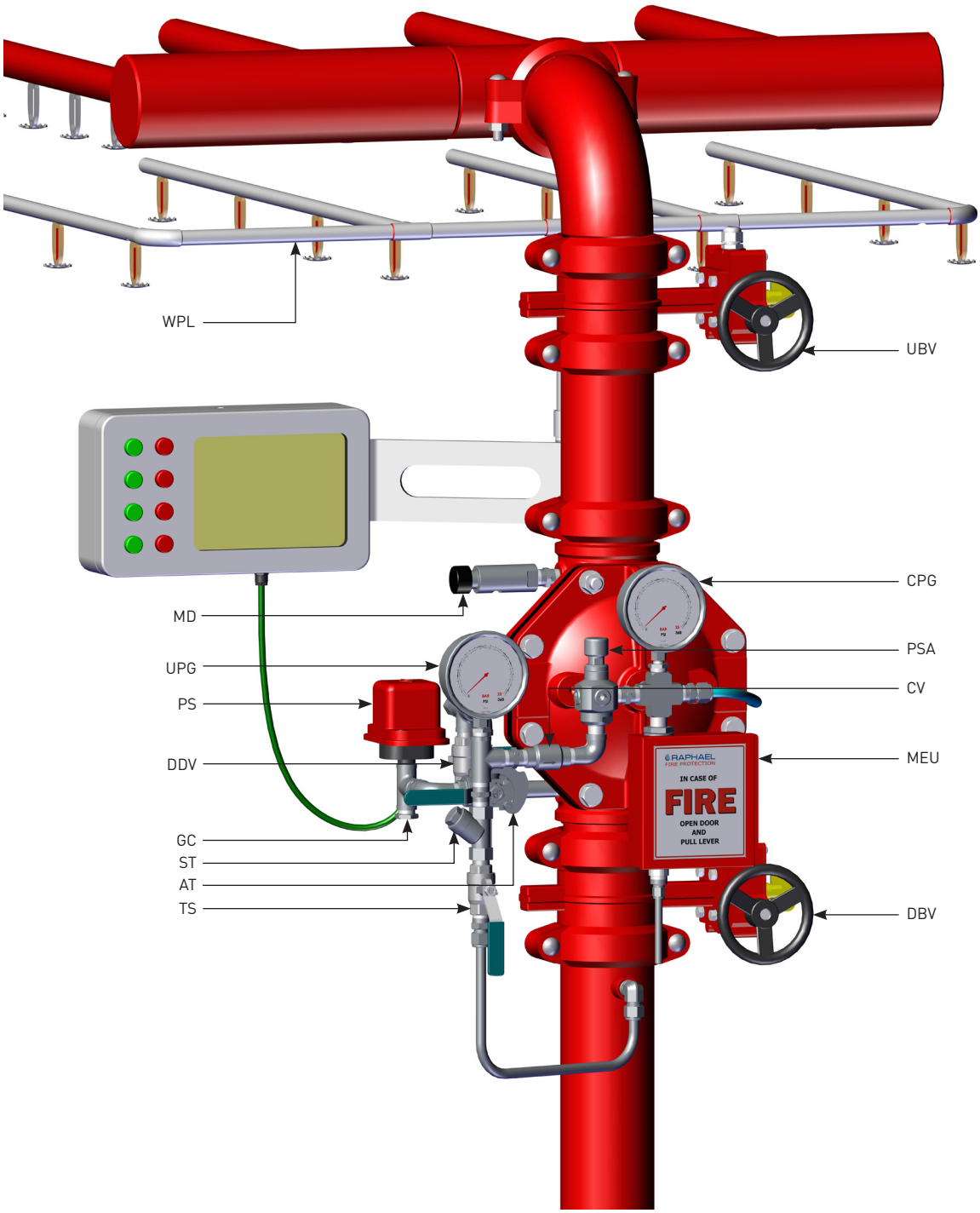

TS – Trim Supply
ST – Strainer
AT – Alarm Test valve
GC – Gong Connection
DDV – Downstream Drain Valve

PS – Pressure Switch
UPG – Upstream Pressure Gauge
MD – Manual Automatic Drain Valve
WPL – Wet Pilot line
UBV – Upstream Butterfly Valve

CPG – Control chamber Pressure Gauge
PSA – Pressure Supply Arrestor
CV – Check Valve
EU – Emergency Unit
DBV – Downstream Butterfly Valve

Parametric drawing:

FDV-DH0

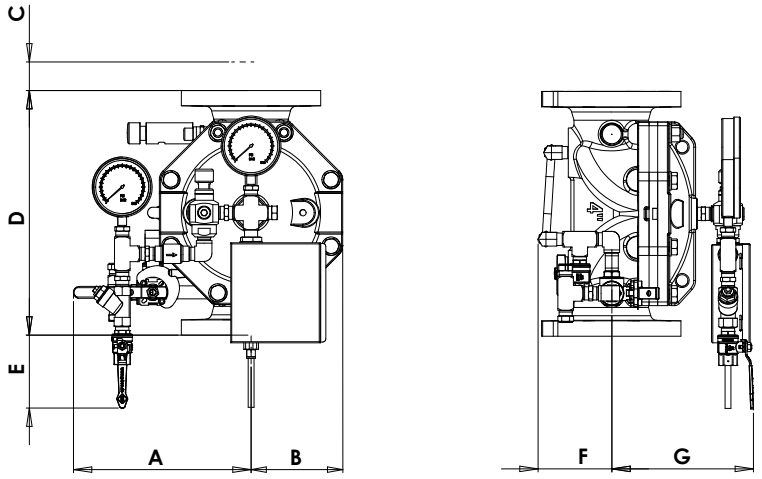

Dimensions Table

Size	1.5"		2"		3"		4"		6"		8"		10"	
	mm	inch	mm	inch	mm	inch	mm	inch	mm	inch	mm	inch	mm	inch
A	255	10	263	10.3	270	10.6	290	11.4	315	12.4	340	13.3	353	3.8
B	122	4.8	122	4.8	122	4.8	150	5.9	178	7	231	9	308	12.1
C	55	2.1	46	1.8	N/A	N/A	N/A	N/A	N/A	N/A	N/A	N/A	N/A	N/A
D	204	8.0	220	8.6	324	12.7	400	15.7	464	18.2	570	22.4	766	30.1
E	295	11.6	213	8.4	147	5.8	112	4.4	80	3.1	74	2.9	N/A	N/A
F	145	5.7	144	5.6	119	4.6	115	4.5	159	6.2	172	6.8	203	7.9
G	150	5.9	170	6.6	193	7.5	225	8.8	295	11.6	330	12.9	420	16.5
Kg/lb	10.2	22.5	12	26.4	30	66.1	35	77.1	55	121	101	223	230	

Factory Standard

MAIN VALVE

BODY & COVER

- Ductile iron
- Cast Steel WCB
- Stainless Steel CF8
- Stainless Steel CF8M
- Nickel Aluminum Bronze

ELASTOMERS:

- NR, fabric reinforced Natural Rubber
- EPDM, fabric reinforced
- NBR, fabric reinforced Nitrile Rubber

COATING:

- Base layer – high built Epoxy FBE
  Top layer – electrostatic Polyester powder RAL 3000
- Rilsan Polyamide based (Nylon 11)
- Internal – vitreous Enamel
  External – Epoxy/Polyester powder RAL 3000

TRIM

PIPING & TUBING:

- Stainless Steel 316
- Copper/Brass
- Cupro-Nickel
- Monel®

FITTINGS:

- Stainless Steel 316
- Brass
- Super Duplex
- Cupro-Nickel
- Monel®

ACCESSORIES:

- Stainless steel CF8M / 316
- Brass
- Nickel Aluminum Bronze
- SMO-245
- Monel®

PLEASE SPECIFY

- Working Media
- Ambiental conditions
- Min/Max operating flow
- Min/Max operating pressure
- System installation orientation
- Deluge valve ends and standard
- Deluge valve material and coating
- Trim materials
- Pilot line installation height
- Additional accessories needed

For more detailed technical information, please refer to chapter Engineering Data.

Raphael reserves the right to change the contents without notice