IOM FDV-DA0

HYDRAULICALLY ACTUATED, LOCAL RESET, ANTI-COLUMNING DELUGE VALVE

Installation **O**peration & **M**aintenance manual

Fire Protection

RAPHAEL VALVES INDUSTRIES

RAPHAEL FP

IOM FDV-DA0

Hydraulically Actuated, Local Reset, anti-columning Deluge Valve

DESCRIPTION



This deluge system is based on Raphael's FDV valve, equipped with a hydraulically actuated control trim. The installed FDV valve is available in a range of optional materials and coatings to meet the required operating conditions, while the functional principle of the system remains unchanged. In a fire situation, a hydraulic detection system (a wet pilot line) activates the valve's control trim. Consequently, the pressurized water trapped in the FDV control chamber is released, causing the valve to open.

The trim is equipped with a PSA, a device that enables local system reset and also serves as a latching mechanism. In addition, it compensates for pressure loss caused by minor leaks resulting from cracked components or loose connections in the trim.

The anti-columning feature allows the use of an almost unlimited wet pilot-line height. The system is tripped by the pressure drop generated when one or more of the wet pilot's automatic sprinklers open, regardless of the hydrostatic pressure created by the vertical water column in the wet pilot line.

This system is suitable for water-spray pipelines equipped with open nozzles.

RAPHAEL FP

PARTS LIST

Hydraulically Actuated, Local Reset, anti-columning Deluge Valve

1. FDV deluge valve
2. DCPV Piot
3. Needle Valve
4. Alarm Test Valve
5. Check Valve
6. "Y" Strainer
7. Control Chamber PG
8. PSA (latch device)
9. Upstream PG
10. Manual Emergence unit
11. Trim pressure supply
12. Upstream Drain Plug
13. Downstream drain valve
14. MADV Drain Valve
15. Downstream PS
16. Gong connection

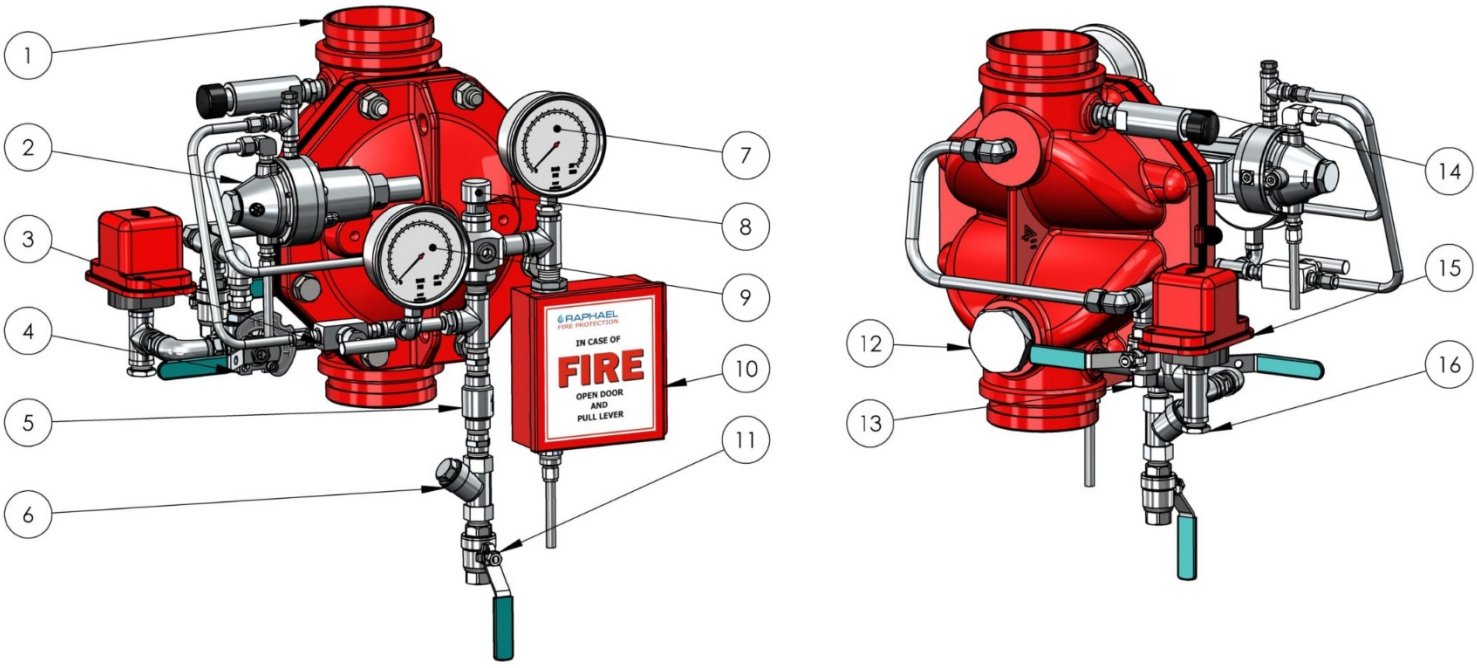

Fig. 1

OPERATION (Reference Figure 1)

SET position:

Water is supplied by the Trim pressure supply valve (**11**) via the "Y" strainer (**6**), Check valve (**5**), flows through the PSA (**8**), and fills the FDV's control chamber. Pressurized water in the valve's control chamber is trapped by the check-valve (**5**), by the closed emergency valve (**10**), and by the blocked port of the DCPV pilot valve (**10**), maintaining the deluge valve in closed position. The pressurized wet pilot line is connected to the DCPV's sense port. Its pressure overcomes the pilot valve's spring and holds this N.O. accessory in a close state. If the wet pilot stays pressurized, the FDV valve is close, and the system is in SET position.

FIRE situations:

When one or more of the automatic sprinklers along the wet pilot line senses fire heat and blows-open, the pressure drops, and the horizontal pipeline drains through the open sprinkler/s. This pressure drop is transmitted into the sense port of the DCPV's. The pilot valve spring overcomes the decreased wet pilot pressure, moving the DCPV to its open position. When the DCPV pilot drains the FDV control chamber through its opened and vented port to the atmosphere, the FDV deluge valve opens and admits water to the sprinklers spray pipeline/s. Simultaneously, the wet pilot's drop of pressure, causes the PSA's internal rubber ball to move to its upper seal seat, preventing upstream flow entering the deluge valve control chamber. By that, the PSA latches the FDV valve in its open position.

Opening the Emergency ball valve's, bypasses all terms, drains the FDV control chamber and opens the valve immediately.

RESET procedure.

Close the upstream butterfly valve (7) or the OS&Y to stop the open sprinklers spray.
Close the trim pressure supply valve (6) to stop the automatic sprinkler/s spray.
Replace all blown-open automatic sprinklers at the wet pilot line.

Open inspector valve at the wet pilot pipe end. Open the trim pressure supply valve (6) and observe the water flow through the open inspector valve: drain until flow is clear, without air bubbles. Then close the inspector valve.
When the wet pilot line is fully pressurized, push the PSA push button (9) and fully pressurize the deluge control chamber.
When done, open the upstream butterfly valve (7) or the OS&Y.

The valve is in SET position.

RAPHAEL FP

INSTALLATION (Reference Figure 2)

1. This system is supplied pre-assembled and factory pre-adjusted **except for the DCPV pilot valve**. Any change carried out at the system's trim components order, pipe and tubes length or ports for axillary connection sizes, will affect the system operation and therefore, prohibited.

2. The system cannot be installed at a location where it might be subjected to freezing temperatures.

3. Sufficient room around the system location should be kept, to enable assembly/disassembly and maintenance work.

4. It should be considered that water will be drained during regular maintenance on a routine basis, during periodical tests procedures and when operating in fire situation. Therefore, a drainage plan should be considered.

5. Systems marked with a prefix "H", e.g. HFDV-DA0 are designed to be installed in horizontal orientation.

6. The downstream pipe connected to the FDV valve at a vertical and horizontal mount systems need to be supported firmly to prevent the pipeline's weight loaded on the system's valve.

7. Any use of pipe/thread reduction-fittings installed at open ports designated for axillary components, (like trim pressure supply, FDV valve's drains, DCPC or Emergency valve drain lines), is prohibited.
8. All connections to water supply, alarms etc. should be done in accordance with figure 2:
   - Wet pilot pipeline connection.
   - (TS) – Trim pressure supply connection.

9. The FDV valve should be installed with the flow arrow marked on the valve's body, in the proper direction.

10. Before performing the high-pressure leak test, make sure that the butterfly valve or the OS&Y valve upstream of the deluge valve is closed, in order to prevent damage to the diaphragms in the valve and in the trim components.

11. Make sure that the gong connected to its designated outlet is supported so that its weight, along with the weight of the piping attached to it, is not applied to the valve trim.

INSTALLATION PARTS LIST (Reference Figure 2)

Hydraulically Actuated, Local Reset, anti-columning Deluge Valve

- **WP** – Wet pilot
- **CB** – Control Board
- **DC** – DCPV
- **PS** – Pressure Switch
- **TV** – Alarms Test Valves
- **NV** – Needle Valve
- **CV** – check Valve
- **ST** – Strainer
- **BF** – Butterfly valve
- **DL** – Deluge Valve
- **PGC** –PG for Control chamber
- **PSA** – Pressure Surge Arrestor
- **PGU** – PG for Upstream
- **EU** – Emergency Unit
- **TS** – Trimm Supply Valve

RAPHAEL FP

Hydraulically Actuated, Local Reset, anti-columning Deluge Valve

Fig. 2

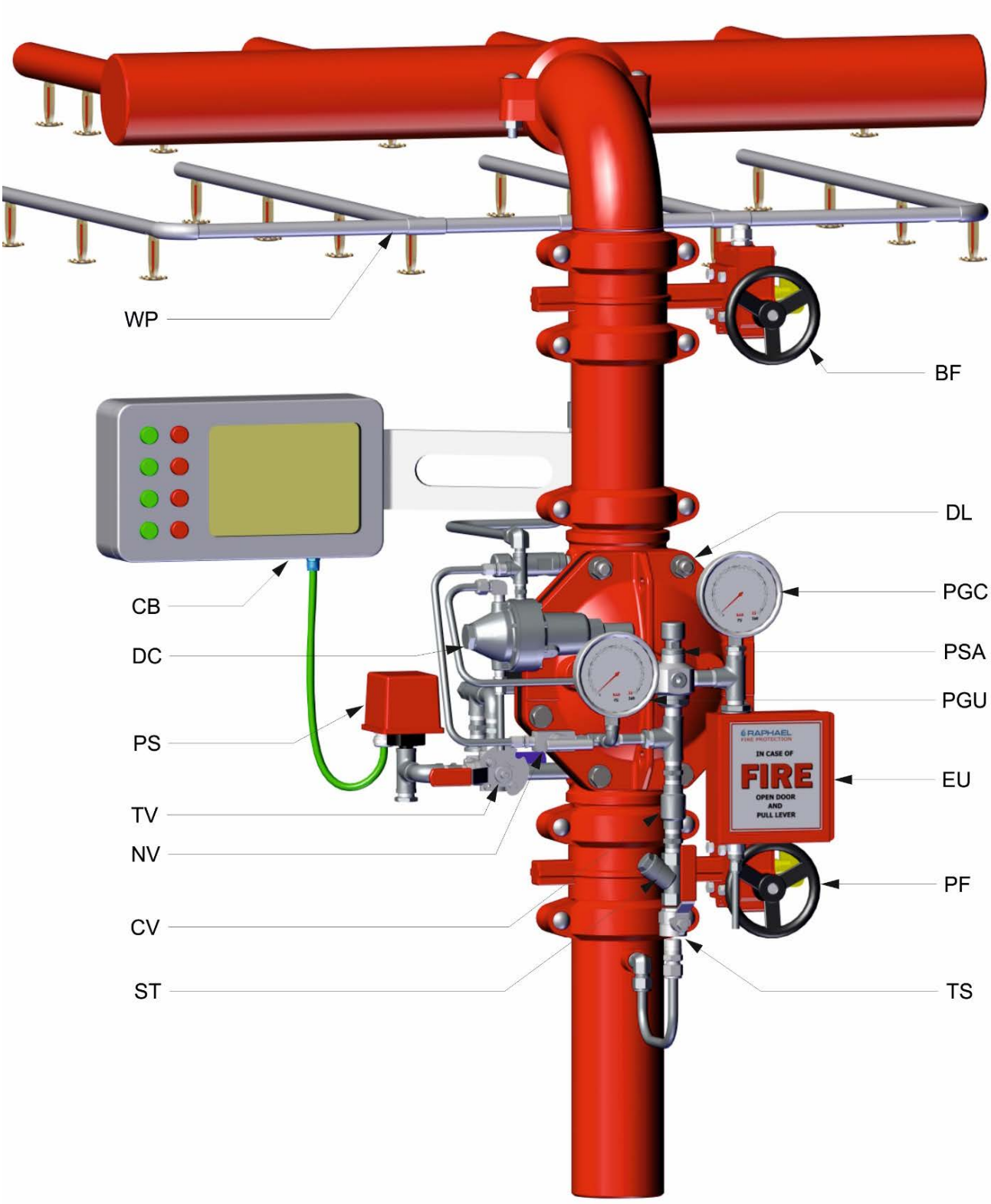

RAPHAEL FP

OPERATING INSTRUCTIONS (Reference Drawing - figure 2)

DCPV Pilot's adjustment procedure:

The procedure described should be carried out after system installation completion and a comprehensive inspection.

(Reference Drawing - figure 2)

1. Make sure the upstream butterfly valve (**BF**) or OS&Y is fully closed.
2. Open fully the needle valve (to speed up the wet pilot filling)
3. Open the downstream drain valve (**13 figure 1**) of the FDV valve.
4. Make sure the trim pressure supply valve (**TS**) is Closed
5. Make sure that the Emergency valve (**EU**) is fully closed.
6. Loosen completely the DCPV (**DC**) pilot's spring by turning the adjustment screw anticlockwise. This closes the drain passage of the valve and enables the wet pilot line filling and pressurizing.
7. Open the inspector's test valve located at the wet pilot line end.
8. Open the trim pressure supply valve (**TS**). Drain the wet pilot valve until a continuous and free of air bubbles flow is observed.
9. Close the inspector's test valve.
10. Close pressure supply valve, Open the strainer's screen plug and clean the screen. Re-install the parts and open the trim pressure supply valve.
11. Press the PSA's push-button and fill the trim and the FDV's control chamber. Consequently, the FDV deluge will close.
12. Gradually open the upstream butterfly valve and make sure there is no dripping out of the downstream drain port. Dripping out means the FDV have a sealing problem and need to be fixed.

The system is ready for a leakage inspection.

RAPHAEL FP

Needle Valve adjustment procedure:

This procedure should be carried out to assure that the needle valve flow rate would not "overcompensate" the pressure drop caused by a blown-open automatic sprinkler. The pressure drop is needed to activate the DCPV pilot and drain the FDV's control chamber.

1. Close the trim pressure supply valve (**TS**)
2. Unscrew the most remote sprinkler at the wet pilot line.
3. Push the PSA push button consecutively.
4. Open the trim pressure supply valve.
5. Gradually, close the needle valve and observe the DCPV drainage: stop turning the needle valve handle when water drainage starts.
   It means that the needle valve rate of flow does not interfere the drop of pressure caused by the "open sprinkler".
6. After meeting the right needle valve rate of flow, secure the valve's stem by tightening its counter nut.
7. Stop pushing the PSA button when the FDV's control chamber is fully pressurized.
8. Open the upstream butterfly valve (**BF**) or OS&Y. Check the FDV's open drain port for any leakage. If ok, screw in its plug.
9. Open the downstream butterfly valve.

The system is in Set position.

RAPHAEL FP

Commissioning the system - phase 2.

Fire Situation Simulation

By the drainage of the wet pilot valve, one can simulate a fire situation and cause the system to response by opening the FDV deluge valve.

1. Close the downstream butterfly valve. Open the downstream drain valve (**13** figure **1**)

2. Open the inspector's valve (located on the wet pilot's pipeline). Trapped water will drain out from the FDV's control chamber through the DCPV pilot's vented port and the FDV valve will open. Water flows out of the open downstream drain valve should be observed.

3. Observe this DCPV drain flow: the flow should run for a few seconds and stop. A drain flow for an extended period or a constant flow can indicate an internal leakage at the PSA.

The valve is ready for Resetting & placing in service

RAPHAEL FP

Commissioning the system - phase 3.

Resetting & placing in service

The procedure described should be carried out after any periodic operational test was simulated.

Note: downstream butterfly valve (BF) is still closed.

FDV downstream drain valve is still open.

ITALIC - For real fire situation reset.
Regular – For fire situation simulation

1. Close the Upstream butterfly valve (**PF**) or OS&Y valve.
2. *Close the trim pressure supply valve (**TS**).*
3. *Replace all wet pilot pipeline's blown-open automatic sprinkler/s.*
4. *Open the trim pressure supply valve.*
5. *Open inspector's valve, drain air bubbles.*
6. *(*For real and simulation fire situation) - *close the inspector's valve.*
7. Close the trim pressure supply valve (**TS**).
8. Clean the "Y" strainer's (**ST**) screen. Reassemble the strainer.
9. Open the trim pressure supply valve.
10. Press the PSA's (PSA) push-button. Release the push-button a few seconds after internal flow sound stops, to assure a complete filling of the FDV valve's control chamber.
11. Open the Upstream butterfly valve (BF) or OS&Y valve.
12. Open the FDV downstream ball valve.

The system is in SET state and placed in service.

MAINTENANCE

Prior to any stoppage of the fire protection system, a fire patrol should be placed in the area covered by the interrupted system.

Prior to generating any test procedures, turning on false alarms or turning off the alarm system, the local safety personnel and the close central fire station must be notified.

Daily Inspection

Make sure that the deluge valve's heating system (If equipped), functions correctly and that the Fire protection valve surrounding temperature is 4°C min.

Monthly Inspection

1. Observe the FDV valve for external damage: observe the piping and hose connections for leakage or damage.
2. Verify that the upstream butterfly valve (**PF**) and the Trim pressure supply valve (**TS**) are in fully open position.
   Downstream drain valve and upstream drain valve (if equipped) are fully close.
3. Push the MADV (**PSA**) and make sure that after emptying condensing water, the drain flow/dripping stops. If a constant leakage is observed, it might indicate a deluge valve sealing problem.
4. Move the 3-way SET/TEST valve (**TV**) to TEST. The acoustic alarm should sound, and the alarm pressure switch (**PS**) should transmit a signal to the main control board.

Annual test procedure

1. Conduct the monthly inspection procedure.

2. Perform the procedure described in chapter - **Commissioning the system - phase 2. -** Fire Situation Simulation. Check and confirm the system's proper operation.

3. Follow the procedure described in chapter - **Commissioning the system - phase 3**. - Resetting & placing in service. Check and confirm the system's proper operation.

Every 5 years inspection procedure

This major inspection and maintenance procedure includes the removal of the trim, the dismantling of the FDV's valve cover and performance of a comprehensive internal part examination. Then, the relevant trim accessories should be replaced, After completion, the Annual maintenance procedure is to be conducted.

1. Close the upstream butterfly valve (**BF**) or OS&Y valve and the trim pressure supply valve (**TS**).

2. Open FDV bottom drain ports. Drain the FDV's control chamber using the emergence valve.

3. Turn off or disconnect all relevant electrical wiring.

4. Release all relevant tubes fitting nuts, cover central union pipe connection and remove the disassembled trim.

5. Remove all the FDV's cover bolts. The cover will hang on its studs (at vertical installation). Release both nuts and remove the cover carefully.

6. Observe the internals of the valve and cover for excessive scale residuals, foreign particles, damaged coating (rust, cracks, or pealing). Worn or damaged parts need to be replaced. Consult Raphael's local representative or the service department for any maintenance or part replacement issue.

7. Replace the Diaphragm supplied with the system's maintenance kit. The identification tongue needs to point to the valve's stamped flow direction arrow side.

8. Reinstall the valve's cover: use Anti-seize paste to lubricate bolts and nuts and tight them in accordance with "Bolt's torque moments table".

9. The PSA rubber ball valve and all seal rings must be replaced.

10. DCPV pilot must be replaced.

11. Reinstall the trim carefully: avoid causing twists or dents on bent tubes and do not overtight the compression fitting's nuts.

12. When the system is fully reassembled, perform the chapters listed:

    - "**Commissioning the system - phase 1** - Filling and pressurizing the system"
    - **"Commissioning the system - phase 2. -** Fire Situation Simulation"
    - **"Commissioning the system - phase 3.** - Resetting & placing in service"

Bolt's Torque Moments Table

Bolt's Torque Moments Table

Valve size	1.5"	2"	2.5"	3"	4"	6"	8"	10"
Torque lb/ft	22	29	36	54	65	72	87	118

Equivalent pipe length for FDV deluge valves

Valve size		1.5"	2"	2.5"	3"	4"	6"	8"	10"
Equivalent length value	ft	11	24	25	28	31	46	72	117
	m	3.6	7.3	7.6	8.5	9.4	14	21.9	35.6

RAPHAEL FP

MARKING

The FDV valves are marked by a laser engraved, black anodized, 0.8mm (0.031”) thick metal plate, riveted to the valve’s cover.

The marking plate contains the data about (top to bottom):

- *Company name and trademark.*
- *Short description (Italic letters)*
- *Application’s type*: FDV-DA0 - Electric actuated Remote Reset Pressure Reducing.
- (P/N) *The Application’s part number*: System properties–Valve properties
- *Rated pressure*: 250 psi
- *Equivalent Length: reference table - page 13.*
- *Serial Number*: Work order number-MM-YY-Number in batch 01-99
- *The UL listing mark & QR code:* EXxxxxx
- *The FM approved mark*
- *The Application’s* diameter in inch: XX”

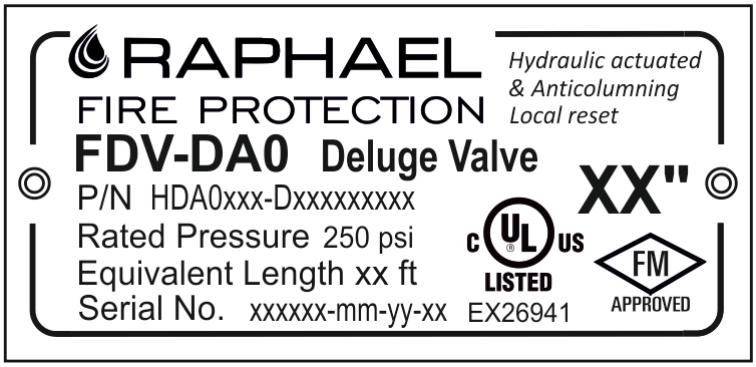

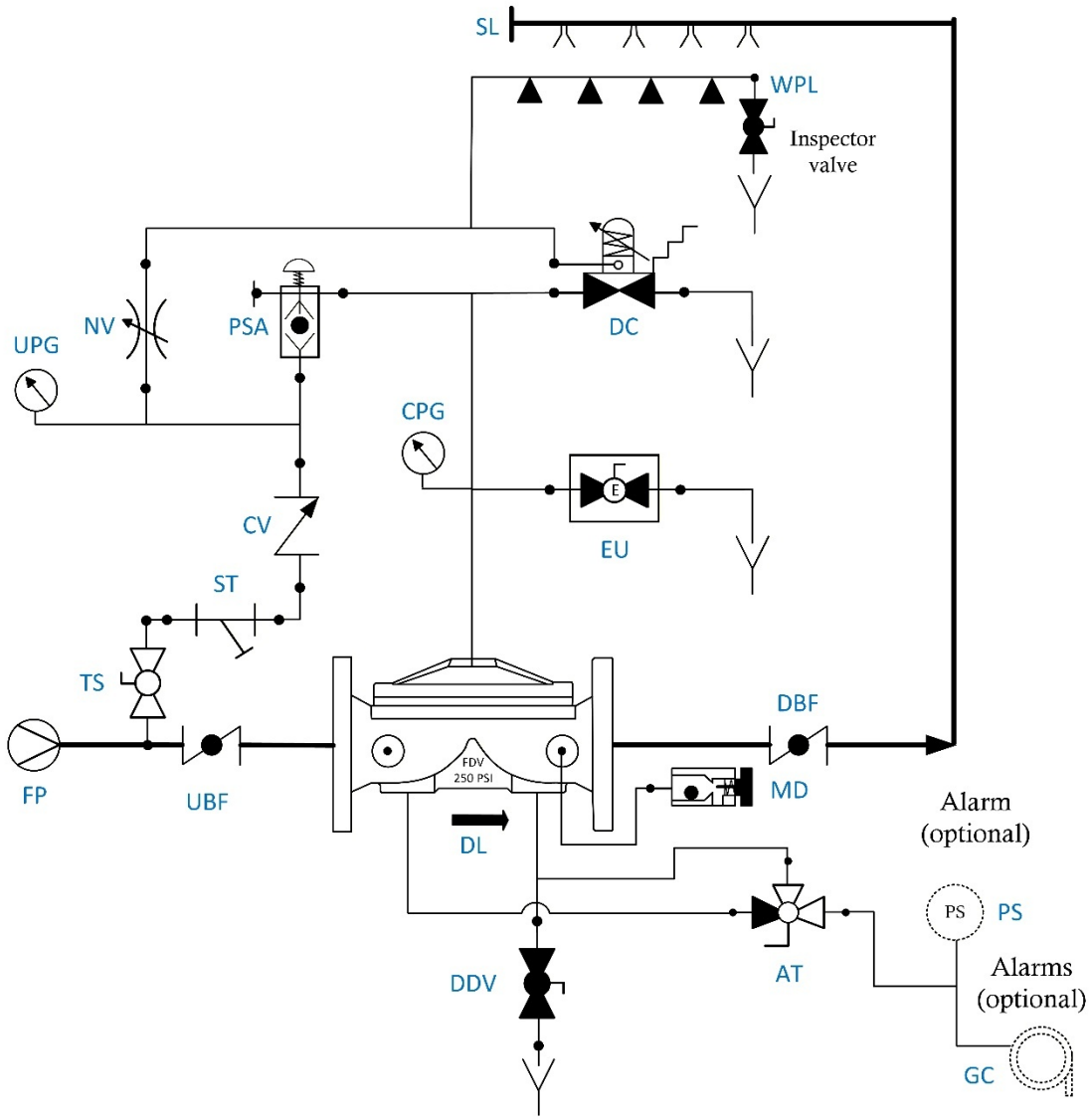

TS -	Trim supply	UBF -	Upstream Butterfly Valve		Water lines
ST -	Strainer	DBV -	Downstream Butterfly Valve		
AT -	Alarm Test valve	DL -	Deluge Valve		
GC -	Gong connection	DC	DCPV – Drain Control Pilot Valve		
CV -	Check Valve	EU -	Manual Emergency Valve		
UPG -	Upstream pressure gauge	SL -	Sprinkles Line		
CPG -	Control Chamber ressure gauge	DDV -	Downstream Drain Valve		
PSA -	Pressure Supply Arrestor	PS -	Pressure Switch		
MD -	MADV – Manual / Automtic Drain Valve	NV -	Needle valve		
WPL	Wet Pilot Line				
FP -	Fire Pump				

RAPHAEL, founded in 1949, is the first Israeli manufacturer of water control valves. RAPHAEL´s research department constantly strives to introduce new and innovative products and solutions for water control systems including water works, fire-protection and irrigation systems.



RAPHAEL

RAPHAEL Valves Industries (1975) Ltd.

North Industrial Zone Or Akiva, 3063927 P.O.Box 555, Israel

Tel. +972 4 6263555 | info@raphael-valves.com | raphael-valves.com

Nov-25