# Hydraulically Actuated & Anti-Columning, Local Reset Deluge Valve FDV - DA0

The FDV is a fire protection control valve for deluge fire sprinkler systems, designed for installation in hazardous environments.

It is suitable for both vertical and horizontal installations and features a globe-pattern, line-pressure-operated design with a direct elastomeric diaphragm seal. The valve contains no balancing spring or internal metallic components in the wetted area. Its hydrodynamic flow path ensures high flow rates with minimal head loss.

The FDV-DA0 deluge system is actuated hydraulically and reset locally.

When a hydraulic detection system - a Wet Pilot Detection Line - is exposed to a predetermined temperature, the automatic fire sprinklers shatter open, causing a pressure drop that activates a pilot valve, which in turn commands the FDV-DA0 deluge valve to open. The Anti-Columning feature ensures reliable system operation regardless of the detection line's height or its distance from the control valve. The deluge system also incorporates an emergency valve that bypasses the fire detection system for manual operation.

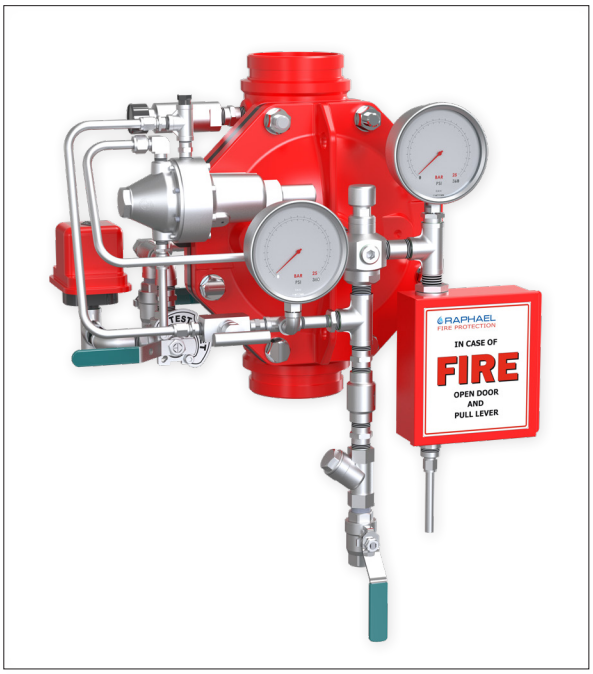


In addition, the FDV-DA0 system is equipped with a PSA device that manually and locally pressurizes the deluge control chamber and the wet pilot line. This keeps the valve closed, prevents re-pressurization during actuation (when the control chamber must be drained), and compensates for minor leakage-related pressure losses. This configuration is suitable for open-nozzle water spray pipelines.

## MARKETS

Marine
Commercial
Residential
Industry
Airports

## TECHNICAL DATA

**FLUID:**
Water, Brackish water, Sea water, Foam

**SIZE RANGE:**
40 mm to 250 mm (1½'' to 10")

**AVAILABLE CONNECTIONS ENDS:**
Flange*Flange, Groove*Groove, Flange*Groove, Groove*Flange, Thread*Thread

**PRESSURE NOMINAL:**
250 psi (17.2 bar)

## APPROVALS

## ADVANTAGES

- Only three parts: body, diaphragm & cover plate, no wet metal spring inside the control chamber.
- Full bore unobstructed.
- Simple reset of the valve to standby position without draining or opening the valve itself, neither closing OS&Y or other valves in the system.
- Full Anti Columning property enables a nearly unlimited pilot line height.
- Open fail safe valve, maintained in stand-by closed position by the PSA.
- Low maintenance cost: the valve is serviced in-line and only one replaceable part - the long-life elastomeric diaphragm.
- Conforms with inspection, Testing and Maintenance Standard of water-based Fire Protection Systems, NFPA 25.

## CHARACTERISTICS

- The hydro-dynamic pattern design ensures high flowrates with minimum head loss.
- The valve trips open automatically upon a gradual release of water pressure from its control chamber. The trip is actuated by a Wet Pilot Line's hydraulic pressure release due to its exposure to flame heat.
  The Anti-Columning properties guarantee an immediate system trip, regardless of the Wet Pilot height.
- Soft closing upon pressurization of the valve's control chamber, by line pressure or other independent water source, prevents surges.
-

The FDV-DA0 resets to stand-by close position by pressurizing the Dry Pilot Line and manually operating the PSA device.

# Schematic drawing: FDV-DA0

## Set position

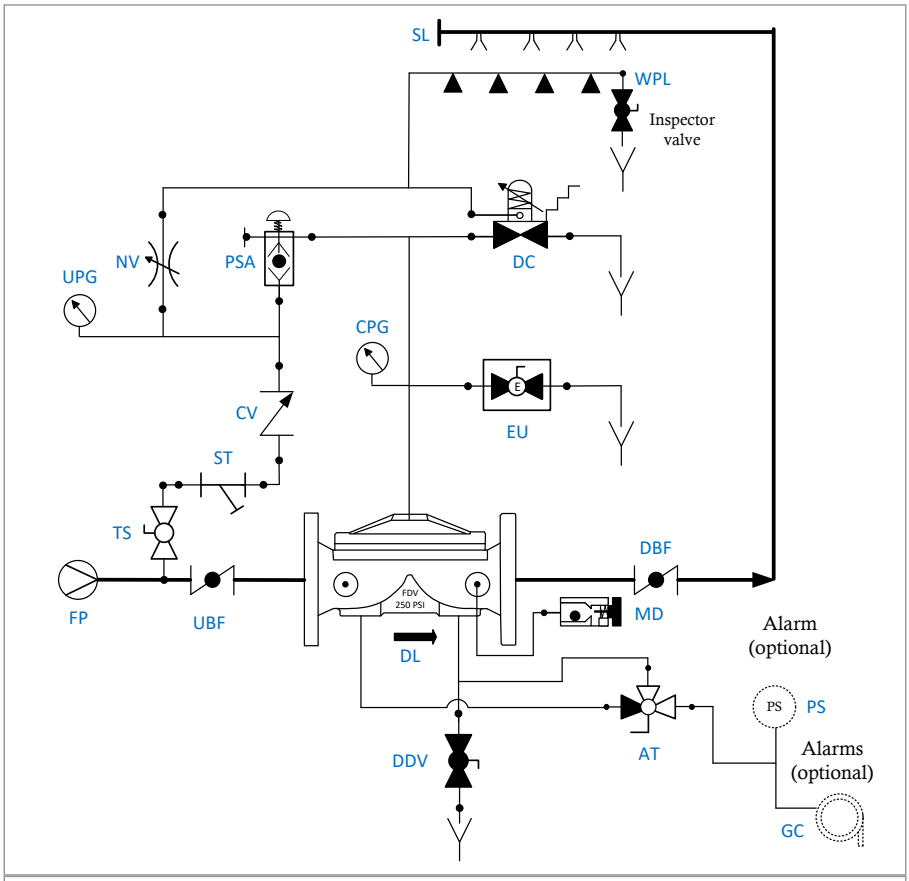


| | | | |
|---|---|---|---|
| TS - | Trim supply | UBF - | Upstream Butterfly Valve |
| ST - | Strainer | DBV - | Downstream Butterfly Valve |
| AT - | Alarm Test valve | DL - | Deluge Valve |
| GC - | Gong connection | DC | DCPV – Drain Control Pilot Valve |
| CV - | Check Valve | EU - | Manual Emergency Valve |
| UPG - | Upstream pressure gauge | SL - | Sprinkles Line |
| CPG - | Control Chamber ressure gauge | DDV - | Downstream Drain Valve |
| PSA - | Pressure Supply Arrestor | PS - | Pressure Switch |
| MD - | MADV – Manual / Automtic Drain Valve | NV - | Needle valve |
| WPL | Wet Pilot Line | | |
| FP - | Fire Pump | | |

Water lines

# OPERATION

### SET position

After pressing the PSA push button and releasing, pressurized water in the valve's control chamber is trapped by the closed PSA (PSA), the closed emergency valve (EM) and by the closed DCPV drain pilot valve (DC). The hydraulic pressure accumulated in the Wet pilot line keeps this device in its close position, maintaining the FDV deluge valve closed.

### FIRE situation

When some of the Wet pilot detection line's automatic fire sprinklers are subjected to the predetermined temperature levels and shutter-open, the pilot line pressure drops and the DCPV (DC) opens. Consequently, the DCPV opens its drain port, regardless of the residual column pressure.

When it opens, the DCPV releases the FDV control chamber pressure causing the valve to open and admit water into the spray sprinklers pipeline

### RESET position

System reset requires the replacement of all Shattered-open Fire sprinklers in the Detection pilot line (PL). The PSA push button needs to be pressed. When pushed down, upstream water pressurizes the Pilot line, resets the DCPV to closed position and pressurizes the control chamber. Consequently, the FDV deluge valve close.



Raphael reserves the right to change the contents without notice

# FDV - DA0

## Typical installation

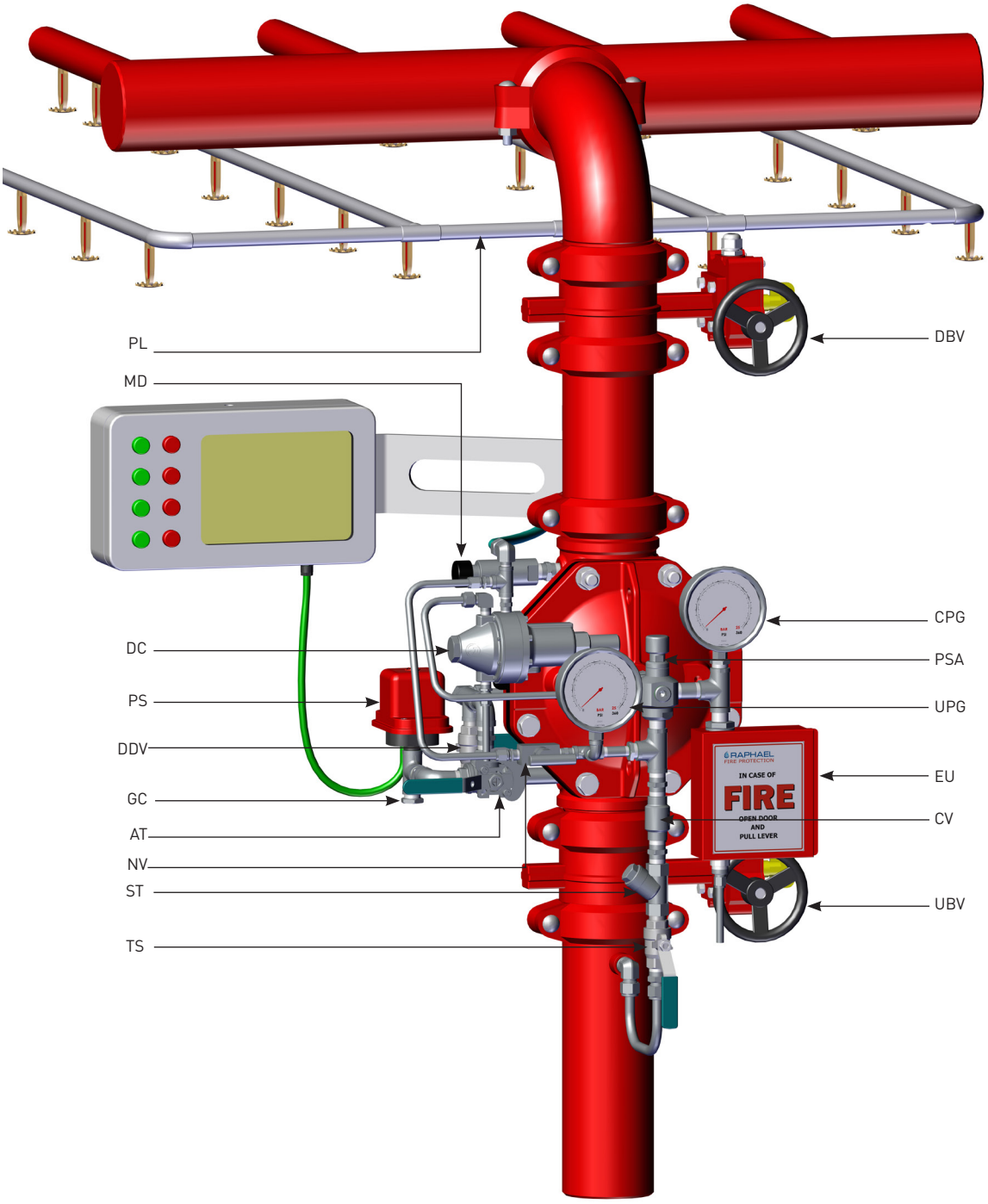


**TS -** Trim Supply
**ST -** Strainer
**AT -** Alarm Test valve
**GC -** Gong Connection
**DDV -** Downstream Drain Valve
**PS -** Pressure Switch
**NV -** Needle Valve
**DC -** Drain Control Pilot Valve
**PSA -** Pressure Supply Arrestor
**MD -** Manual Automatic Drain Valve
**PL -** Pilot line
**UPG -** Upstream Pressure Gauge
**CPG -** Control chamber Pressure Gauge
**UBV -** Upstream Butterfly Valve
**DBV -** Downstream Butterfly Valve
**EU -** Emergency Unit

## Parametric drawing:

FDV-DA0

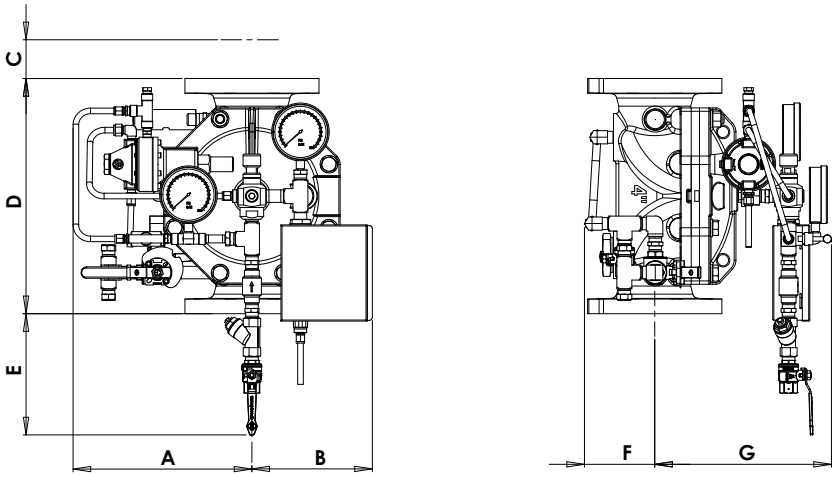


## Dimensions Table

| Size | 1.5" | | 2" | | 3" | | 4" | | 6" | | 8" | | 10" | |
|---|---|---|---|---|---|---|---|---|---|---|---|---|---|---|
| | mm | inch | mm | inch | mm | inch | mm | inch | mm | inch | mm | inch | mm | inch |
| A | 204 | 8 | 204 | 8 | 204 | 8 | 204 | 8 | 316 | 12.4 | 377 | 14.8 | 406 | 15.9 |
| B | 272 | 10.7 | 272 | 10.7 | 272 | 10.7 | 290 | 11.4 | 204 | 8 | 231 | 9 | 308 | 9.1 |
| C | 65 | 2.55 | 61 | 2.4 | 41 | N/A | N/A | N/A | N/A | N/A | N/A | N/A | N/A | N/A |
| D | 204 | 8.0 | 220 | 8.6 | 324 | 12.7 | 400 | 15.7 | 464 | 18.2 | 570 | 22.4 | 766 | 30.1 |
| E | 305 | 12 | 295 | 11.6 | 245 | 9.6 | 206 | 8.1 | 173 | 6.8 | 120 | 4.7 | N/A | N/A |
| F | 118 | 4.6 | 91 | 3.6 | 120 | 4.7 | 120 | 4.7 | 158 | 6.2 | 160 | 6.3 | 203 | 8 |
| G | 220 | 8.66 | 233 | 9.2 | 265 | 10.4 | 294 | 11.6 | 360 | 14.2 | 395 | 15.5 | 484 | 19 |
| Kg/lb | 13.1 | 28.8 | 15.1 | 33.2 | 32.5 | 71.6 | 48.2 | 106 | 59 | 130 | 93 | 205 | 233 | 513 |

## Factory Standard

### MAIN VALVE

**BODY & COVER**

- Ductile iron
- Cast Steel WCB
- Stainless Steel CF8
- Stainless Steel CF8M
- Nickel Aluminum Bronze

**ELASTOMERS:**

- NR, fabric reinforced Natural Rubber
- EPDM, fabric reinforced
- NBR, fabric reinforced Nitrile Rubber

**COATING:**

- Base layer – high built Epoxy FBE
  Top layer – electrostatic Polyester powder RAL 3000
- Rilsan Polyamide based (Nylon 11)
- Internal – vitreous Enamel
  External – Epoxy/Polyester powder RAL 3000

### TRIM

**PIPING & TUBING:**

- Stainless Steel 316
- Copper/Brass
- Cupro-Nickel
- Monel®

**FITTINGS:**

- Stainless Steel 316
- Brass
- Super Duplex
- Cupro-Nickel
- Monel®

**ACCESSORIES:**

- Stainless steel 316/CF8M
- Brass
- Nickel Aluminum Bronze
- Monel®
- Cupro-Nickel

### PLEASE SPECIFY

- Working Media
- Ambiental conditions
- Min/Max operating flow
- Min/Max operating pressure
- System installation orientation
- Deluge valve ends and standard
- Deluge valve material and coating
- Trim materials
- Pilot line installation height
- Addition

For more detailed technical information, please refer to chapter Engineering Data.



Raphael reserves the right to change the contents without notice