IOM FDV-AP0

PNEUMATICALLY ACTUATED, LOCAL RESET, ECONOMIC DELUGE VALVE

Installation Operation & Maintenance manual

Fire Protection

RAPHAEL VALVES INDUSTRIES

RAPHAEL FP

IOM FDV-AP0

Pneumatically Actuated, Local Reset, Economic Deluge Valve

DESCRIPTION

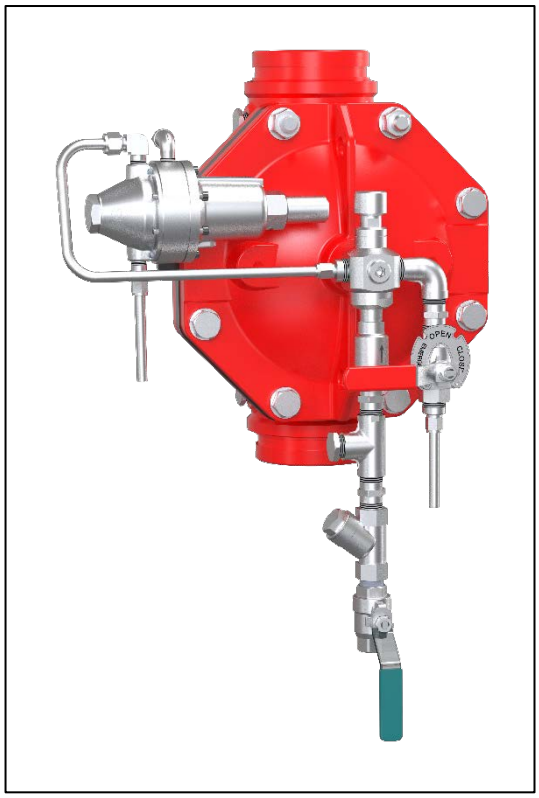

This deluge system is based on Raphael's FDV valve, equipped with a pneumatically actuated control trim. The installed FDV valve is available in a range of optional materials and coatings to meet various operating conditions, but the system's functional principle remains unchanged: in a fire situation, a pneumatic detection system (dry pilot line with sprinklers) trips the valve's control trim. Consequently, the pressurized water trapped in the FDV's control chamber is drained, and the valve opens.

The trim is equipped with a PSA – a device that enables local resetting of the system, i.e., closing the FDV valve by repressurizing the valve's control chamber. The PSA also functions as a latching device, preventing the deluge valve from closing unexpectedly.

This system is suitable for automatic water spray activation through the pilot pipeline, and with open nozzles in the main spraying pipelines.

RAPHAEL FP

PARTS LIST

Pneumatically Actuated, Local Reset, Economic Deluge Valve

1. FDV deluge valve
2. PAV-2 Pneumatic actuator
3. Check Valve
4. Upstream pressure gauge connection port (1/2” NPT Plugged).
5. “Y” Strainer
6. Trim Pressure Supply Valve
7. Manuel emergency unit
8. PSA-Pressure Surge Arrestor
9. Air supply & dry pilot connection port (1/4” NPT temporarily plugged)
10. Downstream side port (1/2” NPT plugged)
11. Bottom downstream drain port (1/2” NPT plugged)
12. Bottom upstream drain (¾”; 1¼”; 2” Plugged)
13. Upstream side port (1/2” NPT plugged)

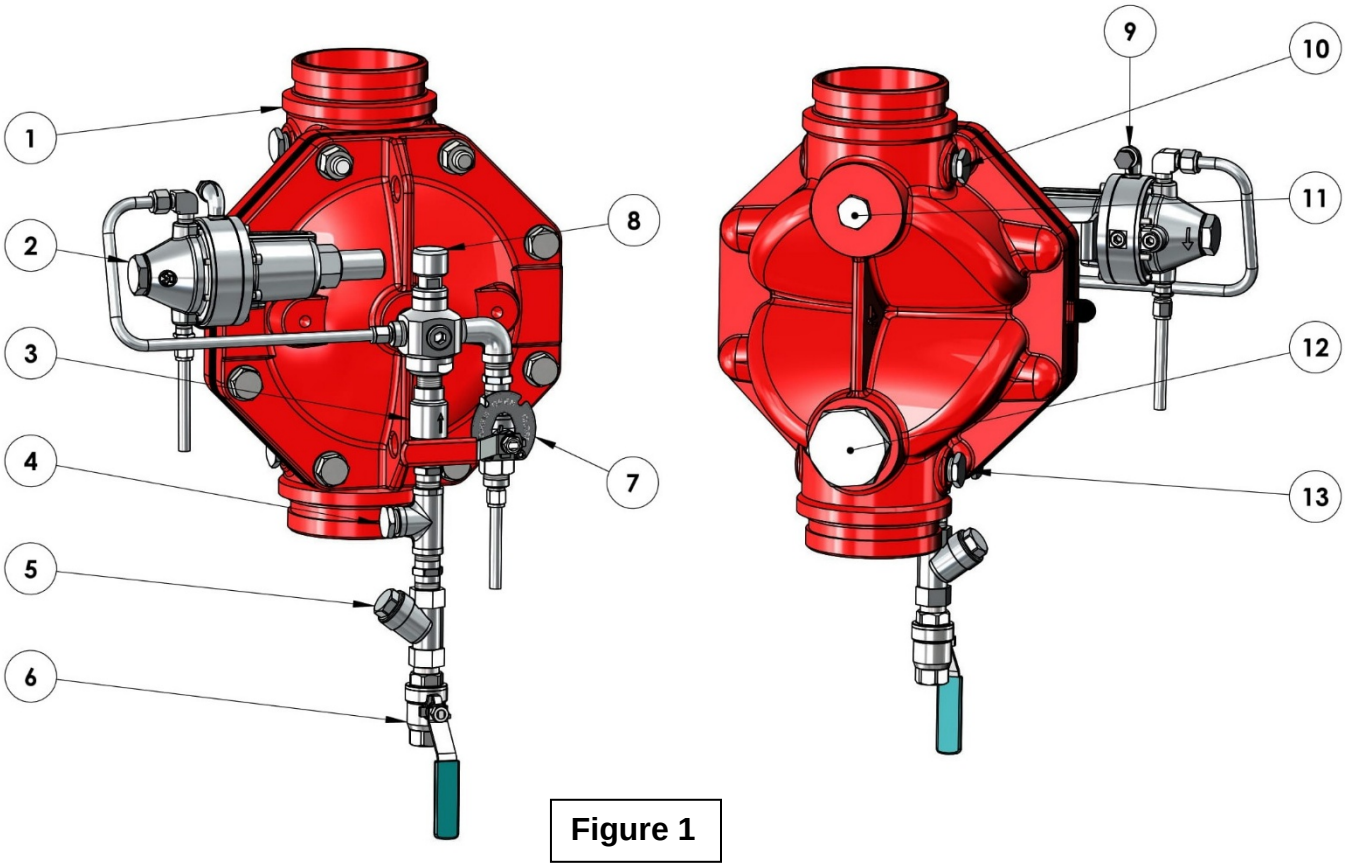

Figure 1

OPERATION (Reference Figure 1)

SET position:

Line pressure (trim supply) is provided through the ball valve (**6**), the "Y" strainer (**5**), and the check valve (**3**). It then passes through the PSA (**8**) while its push button is pressed, filling the FDV control chamber. The pressurized water in the control chamber is trapped by the check valve (**3**), the PAV-2 pneumatic actuator (**2**), the PSA (once its push button is released), and the closed emergency valve (**7**), thereby keeping the deluge valve in its closed position.
The PAV-2 control chamber (**2**), which is pressurized by the dry pilot line, keeps the actuator closed and blocks the FDV drain line. If minor leakage occurs in the FDV control-chamber piping, the PSA (**8**) automatically shifts to its compensation mode, ensuring the valve remains closed.

Fire Situation

When one or more sprinklers on the dry pilot line are exposed to fire, they blow open and the pneumatic pressure drops. Consequently, the PAV-2 shifts to its open state and drains the FDV control chamber through the PSA upper manifold to the atmosphere. The FDV deluge valve opens and water flows into the sprinkler pipeline. The drop in pressure in the PSA upper manifold causes the internal ball to rise to its upper seat, preventing upstream flow from entering the deluge valve control chamber. In this way, the PSA latches the FDV valve in its open position.
Opening the emergency ball valve (**7**) bypasses all components, drains the FDV control chamber, and opens the valve immediately.

Reset Position

1. Close the upstream butterfly valve (**12,** figure **2**).
2. Close the trim pressure supply (**5**). Close the air pressure supply to the dry pilot line by closing the ball valve (**5**, figure **2**) at the entrance to the ASK – Air Supply Unit.
3. Replace all dry pilot line sprinklers that have blown open.
4. When done, open the ball valve at the ASK entrance and pressurize the dry pilot pipeline. Pressurizing the dry pilot line will cause the PAV-2 (**2**) to shift to its closed state and block the valve control-chamber drain.
5. Open the trim pressure supply valve (**5**).
6. Afterward, press the PSA (**8**) push button until the FDV control chamber is fully pressurized.
7. Open the upstream butterfly valve (**12**, figure **2**). The system is now in the SET position.

RAPHAEL FP

INSTALLATION (Reference Figure 2)

1. This system is supplied pre-assembled and factory pre-adjusted. Any change carried out at the system's trim components order, pipes and tubes length or ports for axillary connection sizes, will affect the system operation and therefore, prohibited.

2. The system cannot be installed at a location where it might be subjected to freezing temperatures.

3. maintaining sufficient room around the system location ensures operational safety, and ease of maintenance.

4. It should be considered that water will be drained during regular maintenance on a routine basis, during periodical tests procedures and when operating in fire situation. Therefore, a drainage plan should be considered.

5. The system described is to be mounted vertically only. Systems with identical operation but for horizontal installation are marked with a prefix "H", e.g. HFDV-AP0.

6. The downstream pipe connected to the FDV valve at Vertical and horizontal mount system, is to be supported firmly to prevent the pipeline's weight to be loaded on the system's valve.

7. Any use of pipe/thread reduction-fittings installed at open ports designated for integral and optional axillary components, (like water motor alarm, trim pressure supply, FDV valve's drains), is prohibited.

8. All connections to water supply, should be done in accordance with figure 1
   (**6**) – Trim pressure supply connection - ½" NPT female.
   (**10 and or 11**) – downstream side port for optional Alarm gong & Pressure switch & drain valve & downstream pressure gauge - ½" NPT female.
   (**9**) – Dry pilot line to the PAV-2 actuator – ¼" NPT female (remove temporary plug).
   (**12 and or 13**) optional Upstream pressure gauge. **12** = ¾"; 1¼"; 2". **13** = ½" NPT

9. The FDV valve should be installed with the flow arrow marked on the valve's body, in the proper direction.

10. Before performing the high-pressure leak test, make sure that the butterfly valve or the OS&Y valve upstream of the deluge valve is closed, in order to prevent damage to the diaphragms in the valve and in the trim components.

11. Make sure that the gong connected to its designated outlet is supported so that its weight, along with the weight of the piping attached to it, is not applied to the valve trim.

INSTALLATION PARTS LIST (Reference Figure 2)

Pneumatically Actuated, Local Reset, Economic Deluge Valve

1. Trim supply valve (1/2” NPT female)
2. “Y” Strainer
3. Check Valve
4. Quick pilot line filling ball valve
5. ASK (Air Supply Kit) air supply ball valve (1/4” NPT female)
6. PAV-2 Pneumatic Actuator Valve 2-way.
7. Dry pilot line and air supply from ASK connection port (1/4” BSP female)
8. Dry pilot line.
9. Downstream separation valve (butterfly or OS&Y valves).
10. PSA Pressure Surge Arrestor
11. Control chamber pressure gauge port (1/2” NPT female)
12. Manual Emergency Unit
13. Upstream separation valve (butterfly or OS&Y valves).

RAPHAEL FP

Pneumatically Actuated, Local Reset, Economic Deluge Valve

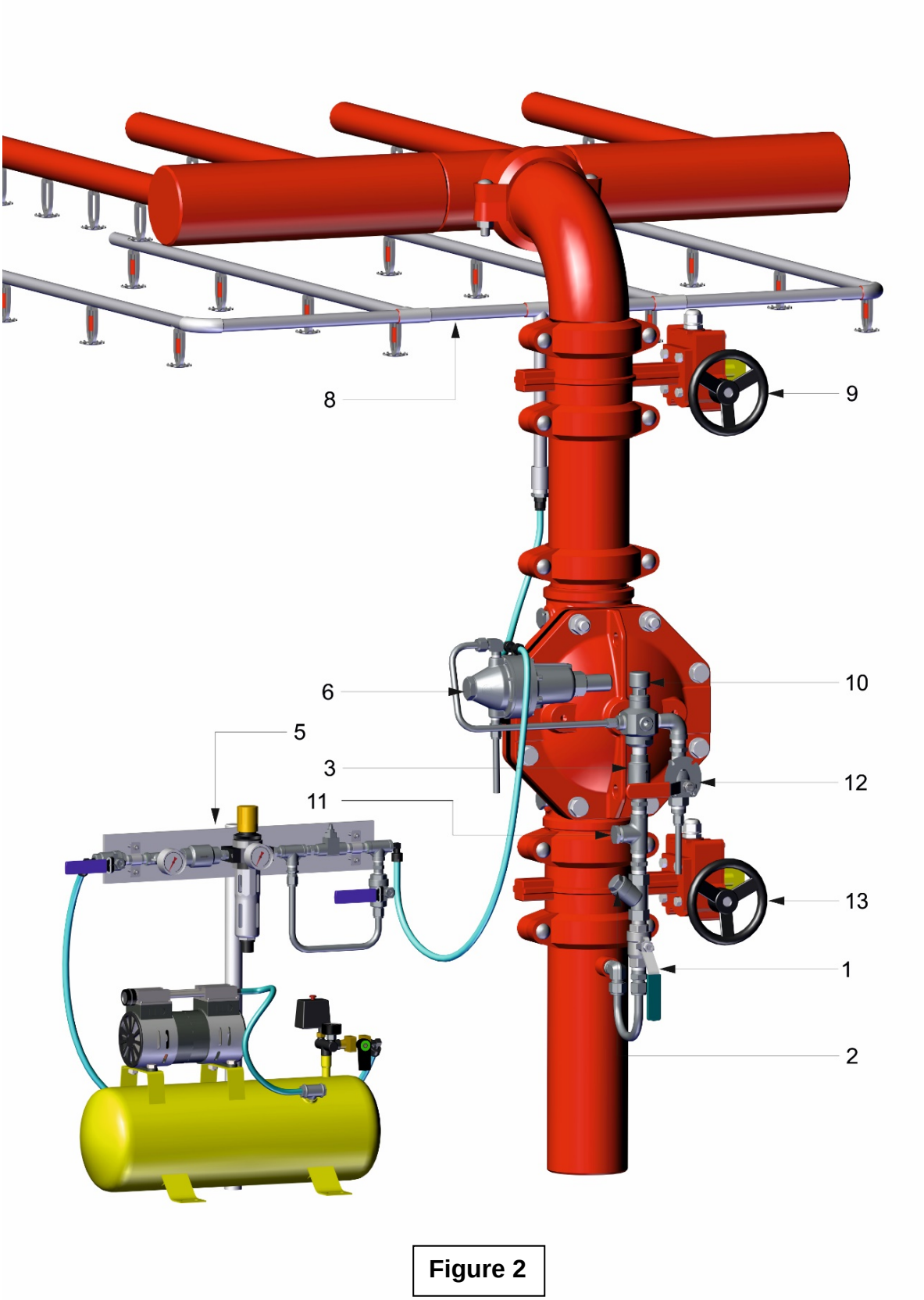

Figure 2

RAPHAEL FP

OPERATING INSTRUCTIONS (Reference Drawing - figure 2)

Commissioning the system - Phase 1

Filling and pressurizing the system.

The procedure described should be carried out after system installation completion and a comprehensive inspection. (Reference Drawing - figure 2)

1. The filling process is performed only after flushing the pipeline. The flushing needs to be done when both butterfly valves (**9** & **13**) are open, and the trim supply valve (**1**) is closed.

2. Make sure the upstream butterfly valve (**13**) is fully close.

3. Make sure the trim pressure supply ball valve (**1**) is Closed.

4. Make sure that the Emergency valve (**12**) is fully closed.

5. Pressurize the pilot line to the rated pressure. No adjustments to the PAV-2 (**6**) actuator are needed as the device is factory set. The process can be expedited by opening temporarily the quick filling valve (**4**). After the pilot line pressurizes, this ball valve must be close.

6. Make sure that the FDV's downstream port is unplugged (**11 figure 1**) or drain valve (if equipped) is open. The upstream drain port (**12 figure 1**) needs to remain plugged, or its valve (if equipped) needs to be close.

7. Open the trim pressure supply valve (**1**).

8. Press the PSA's push-button (**8**) for about 5-15 seconds and fill the trim and FDV's control chamber.

9. Open gradually the upstream butterfly valve (1**3**) and make sure the downstream drain port (**11 figure 1**) is not dripping.

10. Leave the downstream drain port unplugged or drain ball valve (if equipped) open.

The system is ready for the "fire situation simulation".

RAPHAEL FP

Commissioning the system - phase 2.

Fire Situation Simulation (Reference Drawing - figure 2)

The procedure described should be carried out after the system was pressurized and a comprehensive leakage inspection was commissioned.
Energizing the solenoid can simulate a fire situation and cause the system to response by opening the FDV deluge valve.

NOTICE:
Prior to any stoppage of the fire protection system, a fire patrol should be placed in the area covered by the interrupted system.
Prior to generating any test procedures, turning on false alarms or turning off the alarm system, the local safety personnel and the close central fire station must be reported.
(Reference drawing - figure 2)

1. Close the downstream butterfly valve (**9**).

2. Open the inspector's valve (at the end of the dry pilot line **8** – not illustrated) to vent the pilot line. The pilot's pressure drop will cause the PAV-2 actuator (**6**) to open and drain the FDV's control chamber. Consequently, the FDV deluge valve will open.

3. Close the downstream separation butterfly valve (**9**).

4. Observe the open downstream drain port (**11 figure 1**): A significant stream of water should flow out of this valve.

5. Observe the PAV-2 drain tube: While draining the valve's control chamber, the flow should run for no more than a few seconds (depending on the valve's size) and when deluge control chamber become fully drained, the flow should stop.
   Note that a drain flow for an extended period, or a constant flow, can indicate an internal leakage at the PSA device. If ok. -

The system is ready for re-setting and placing in service.

RAPHAEL FP

Commissioning the system - phase 3.

Resetting & placing in service

The procedure described should be carried out after any periodic operational test - simulated or real fire situation. After a real fire situation, replace all blown-open sprinklers before pressurizing the pilot line.

Resetting after a Fire Situation Simulation:

1. Close the Upstream Butterfly Valve (**13**)
2. Close the trim pressure supply (**1**).
3. Close the inspector's valve (at the end of the dry pilot line **8**). Waite until pilot's line reaches to set pressure. The process can be expedited by opening temporarily the quick filling valve (**4**).
4. Disassemble the "Y" strainer (**2**) and clean its screen. Re-assemble the strainer.
5. Open the pressure supply valve (**1**).
6. The PSA (**8**) push-button should be pressed down for about 5-15 seconds until the FDV control chamber is fully pressurized.
7. The Upstream Butterfly valve (**13**) and the downstream butterfly valve (**9**) should be opened gradually.
8. Make sure that there is no leakage out of downstream drain port (**11 figure 1**) and if ok, close this port by screwing in its plug.

Resetting after a Real Fire Situation:

1. Close the Upstream Butterfly Valve (**13**)
2. Close the trim pressure supply (**1**).
3. Close the air supply ball valve at the ASK (**5**)
4. All the Dry pilot line's blown-open sprinklers, need to be replaced (**8**).
5. When done, open the air supply ball valve at the ASK (**5**)
6. Disassemble the "Y" strainer (**2**) and clean its screen. Re-assemble the strainer.
7. Open the pressure supply valve (**1**).
8. The PSA (**8**) push-button should be pressed down for about 5-15 seconds until the FDV control chamber is fully pressurized.
9. The Upstream Butterfly Valve (**13**) gradually, and the downstream Butterfly Valve (**9**) should be opened.

The system is in SET state and placed in service.

MAINTENANCE (Reference Figure 2)

Prior to any stoppage of the fire protection system, a fire patrol should be placed in the area covered by the interrupted system.
Prior to generating any test procedures, turning on false alarms or turning off the alarm system, the local safety personnel and the close central fire station must be notified.

The Maintenance and inspection procedures are based on the relevant chapters at NFPA 25.

Daily Inspection

Make sure that the deluge valve's heating system (If equipped), functions correctly and that the Fire protection valve surrounding temperature is 4°C min.

Monthly Inspection

1. Observe the FDV valve for external damage: observe the piping and hose connections for leakage or damage.

2. Verify that the upstream butterfly valve (**13**) and the Trim pressure supply valve (**1**) are in fully open position.

3. Make sure that supply water pressure is correct, and it is applied to the deluge Valve inlet and trim.

4. Unscrew the downstream drain port plug and make sure that after emptying condensing water, the drain flow/dripping stops. If a constant leakage is observed, it might indicate a deluge valve sealing problem. If ok, reassemble the port's plug.

RAPHAEL FP

Annual test procedure

1. Conduct the monthly test & inspection procedure.

2. Perform the procedure described in chapter - **Commissioning the system - phase 2. -** Fire Situation Simulation. Check the system's proper operation.

3. Follow the procedure described in chapter - **Commissioning the system - phase 3.** - Resetting & placing in service, chapter ***Resetting after a Fire Situation Simulation.***

Every 5 years inspection procedure

This major inspection and maintenance procedure includes the removal of the trim, the dismantling of the FDV's valve cover and the performance of a comprehensive internal part examination. Then, the relevant trim accessories should be replaced. After completion, the Annual maintenance procedure is to be conducted.

1. Close the upstream butterfly valve (**13**) and the trim pressure supply valve (**1**).

2. Unscrew the drain ports plugs (**12 & 12 figure 1**) and in addition, drain the FDV's control chamber using the Emergency valve (**12**).

3. Release all relevant tubes fitting nuts and the central union pipe connection (if equipped) at valves cover center.

4. Remove the disassembled front trim.

5. Remove all the FDV's cover bolts. The cover will hang on its studs. Release both nuts and remove the cover carefully.

6. Observer the internals of the valve and cover for excessive scale residuals, foreign particles, damaged coating (rust, cracks, or pealing).

7. Worn or damaged parts should be replaced. Consult Raphael's local representative or the service department for any maintenance issue or part replacement issue.

8. Replace the Diaphragm. The identification tongue should point to the valve's stamped size (diameter in inch) side.

9. Reinstall the valve's cover: use the Anti-seize paste tube supplied in the maintenance kit for bolts and nuts pre-installation lubrication. Tight it in accordance with **"Bolt's torque moments table".**

10. Reinstall the front trim carefully: avoid causing twists or dents on bent tubes and do not overtight the compression fitting's nuts.

11. When the system is fully re-assembled, perform the "**Commissioning the system - phase 1** - Filling and pressurizing the system" procedure.

12. Perform the **Annual test procedure.**

Bolt's Torque Moments Table

Valve size	1.5"	2"	2.5"	3"	4"	6"	8"	10"
Torque lb/ft	22	29	36	54	65	72	87	118

Equivalent pipe length for FDV deluge valves

Valve size		1.5"	2"	2.5"	3"	4"	6"	8"	10"
Equivalent length value	ft	11	24	25	28	31	46	72	117
	m	3.6	7.3	7.6	8.5	9.4	14	21.9	35.6

RAPHAEL FP

MARKING

The FDV valves are marked by a laser engraved, black anodized, 0.8mm (0.031”) thick metal plate, riveted to the valve’s cover.

- *Company name and trademark.*
- *Short description (Italic letters)*
- *Application’s type*: FDV-AP0 - Pneumatic actuated Local Reset.
- (P/N) *The Application’s part number*: System properties–Valve properties
- *Rated pressure*: 250 psi
- *Equivalent Length:* reference table - page 13.
- *Serial Number*: Work order number-MM-YY-Number in batch 01-99
- *The Application’s* diameter in inch: XX”

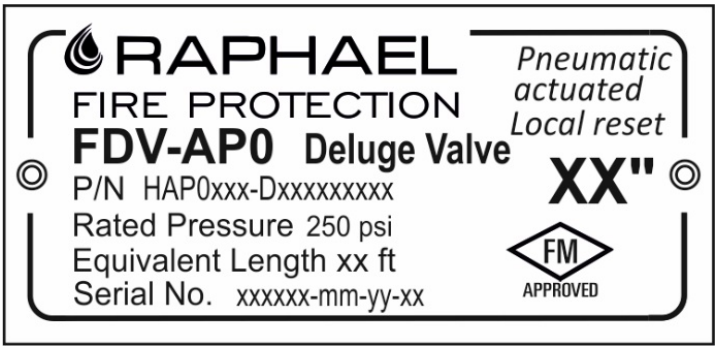

RAPHAEL FP

Raphael ASK – Air Supply Kit

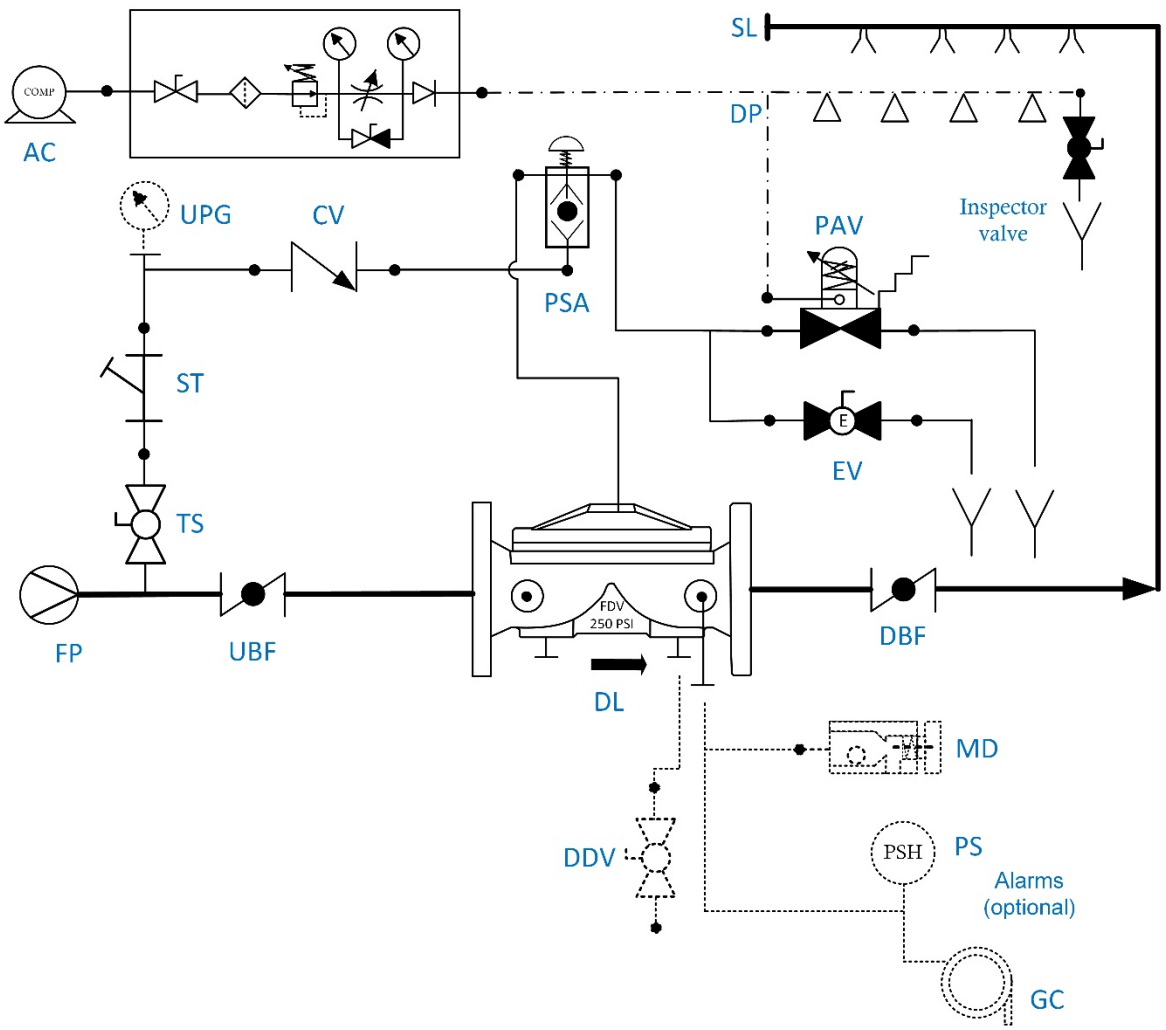

TS -	Trim supply	DL -	Deluge Valve		Water lines
ST -	Strainer	SL -	Sprinkles Line		Air line
AT -	Alarm Test valve	PC -	Pressure Gauge Connection		Optional
PAV -	PAV2 – Pneumatic Actuator Valve	NV -	Needle valve		
CV -	Check Valve				
UBF -	Upstream Butterfly Valve	Optional			
DBV -	Downstream Butterfly Valve	DDV -	Downstream Drain Valve		
PSA -	Pressure Supply Arrestor	PS -	Pressure Switch		
EU -	Manual Emergency Valve	MD -			
WPL	Wet Pilot Line	UPG -	Upstream pressure gauge		
FP -	Fire Pump	GC -	Gong connection		

RAPHAEL, founded in 1949, is the first Israeli manufacturer of water control valves. RAPHAEL´s research department constantly strives to introduce new and innovative products and solutions for water control systems including water works, fire-protection and irrigation systems.



RAPHAEL

RAPHAEL Valves Industries (1975) Ltd.

North Industrial Zone Or Akiva, 3063927 P.O.Box 555, Israel

Tel. +972 4 6263555 | info@raphael-valves.com | raphael-valves.com

Nov-25