Pneumatically Actuated, Local Reset, Economic Deluge Valve

FDV-AP0

The FDV-AP0 fire protection system is based on Raphael's FDV deluge valve and is equipped with a pneumatically actuated control trim. The FDV is a fire protection control valve for deluge sprinkler systems, specifically designed for installation in hazardous environments. It is suitable for both vertical and horizontal installations and features a globe-pattern, line-pressure-operated design with a direct elastomeric diaphragm seal. The valve contains no balancing spring and no internal metallic components in the wetted area. Its hydrodynamic flow path ensures high flow rates with minimal head loss.

The FDV-AP0 deluge system is pneumatically actuated and locally resettable. In a fire situation, when the pneumatic dry pilot detection line is exposed to flame heat, one or more automatic sprinklers shatter, venting air pressure from the actuator and causing the deluge valve to open.

The system incorporates an emergency valve that bypasses the fire detection system for manual operation. Additionally, the trim is equipped with a PSA - a device that enables local system reset, i.e., closing the FDV valve by repressurizing its control chamber.

The system is suitable for use with automatic sprinklers on the dry pilot pipeline and with open nozzles on the main spraying pipelines.

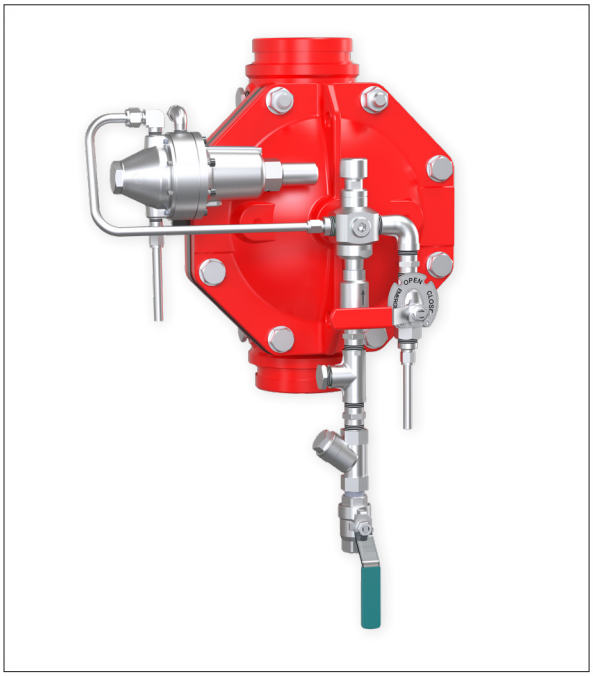

MARKETS

Commercial | Industry | P.O.G. | Storage | Residential | Airport

TECHNICAL DATA

FLUID:
Water, Brackish water, Sea water, Foam

PNEUMATICS: Air, Nitrogen

SIZE RANGE:
40mm to 250mm (1½'' to 10")

AVAILABLE CONNECTIONS ENDS:
Flange*Flange, Groove*Groove, Flange*Groove, Groove*Flange, Thread*Thread

PRESSURE NOMINAL:
250 psi (17.2 bar)

PNEUMATIC PRESSURE:
29-58 psi (2-4 bar)

APPROVALS

FM APPROVED

ADVANTAGES

- Consists of only three parts: body, diaphragm, and cover plate – no wet metal spring inside the control chamber.
- Full-bore, unobstructed design.
- Simple manual reset to standby position without draining or opening the valve, and without closing the OS&Y or other valves in the system.
- Full anti-columning property allows for virtually unlimited pilot line height.
- Fail-safe, open-type valve maintained in the standby closed position by the PSA.
- Low maintenance cost: serviced in-line with only one replaceable part – the long-life elastomeric diaphragm.
- Conforms to the Inspection, Testing, and Maintenance Standard for Water-Based Fire Protection Systems (NFPA 25).

CHARACTERISTICS

- Hydrodynamic pattern design ensures high flow rates with minimum head loss.
- The valve trips open automatically upon a gradual release of water pressure from its control chamber. The trip is actuated by the pneumatic pressure release of the Dry Pilot Line, caused by its exposure to flame heat.
- Soft closing, upon pressurization of the valve's control chamber - by line pressure or another independent water source - prevents surges

The FDV-AP0 resets to the stand-by closed position by pressurizing the Dry Pilot Line and manually operating the PSA device.

Schematic drawing: FDV-APO

Set position

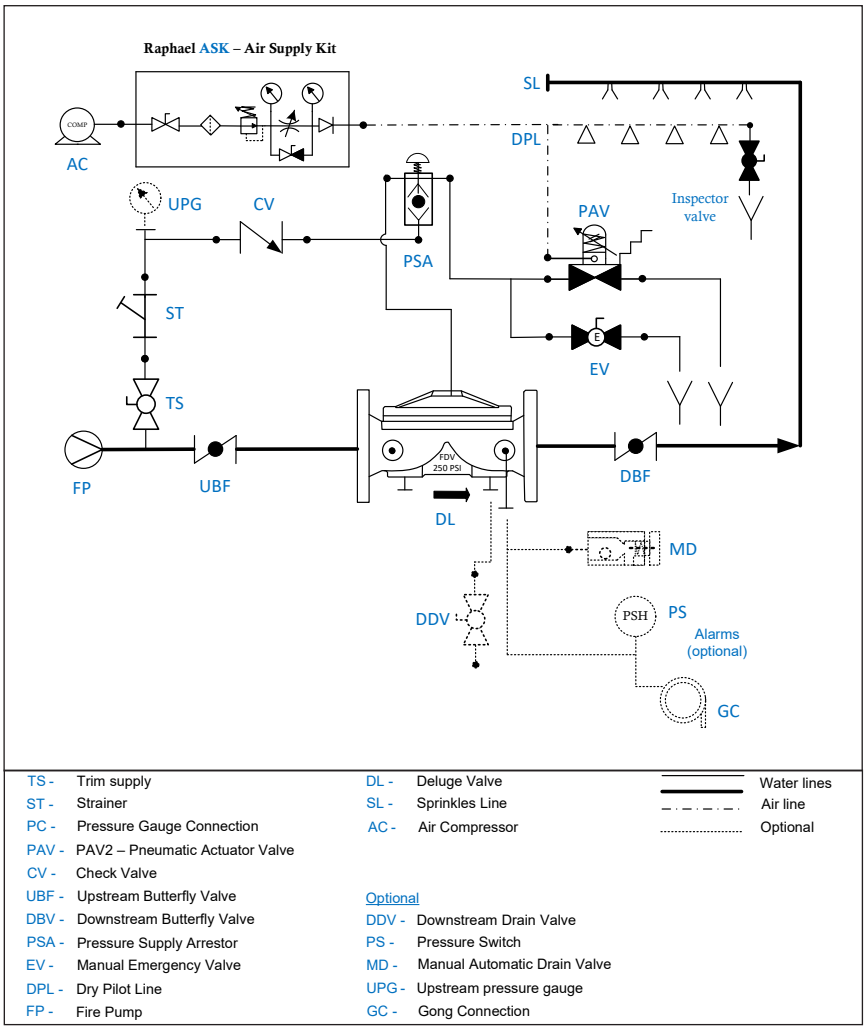

OPERATION

SET position

The pneumatic pressure in the Dry Pilot line keeps the pneumatic actuator (PAV) closed. Pressurized water in the deluge valve control chamber (DL) is retained by the check valve (CV), the closed PSA (PSA), the closed emergency valve (EV), and the closed pneumatic actuator (PAV). As a result, the FDV deluge valve (DL) remains closed.

FIRE situation

When one or more automatic sprinklers in the Dry Pilot detection line (DP) are exposed to fire heat and open, the detection line depressurizes the actuator (PAV) control chamber. The actuator then opens and drains the deluge valve control chamber. Consequently, the FDV deluge valve (DL) opens and supplies water to the sprinkler line.

RESET position

Resetting the system requires replacing all open sprinklers in the Dry Pilot detection line. The Dry Pilot line and the PAV actuator control chamber are then repressurized by the ASK to return the actuator to the closed position. Re-pressurization is performed by pressing the PSA push button. This action refills and pressurizes the FDV deluge valve control chamber, causing the valve to close.

Raphael reserves the right to change the contents without notice

FDV-AP0

Typical installation

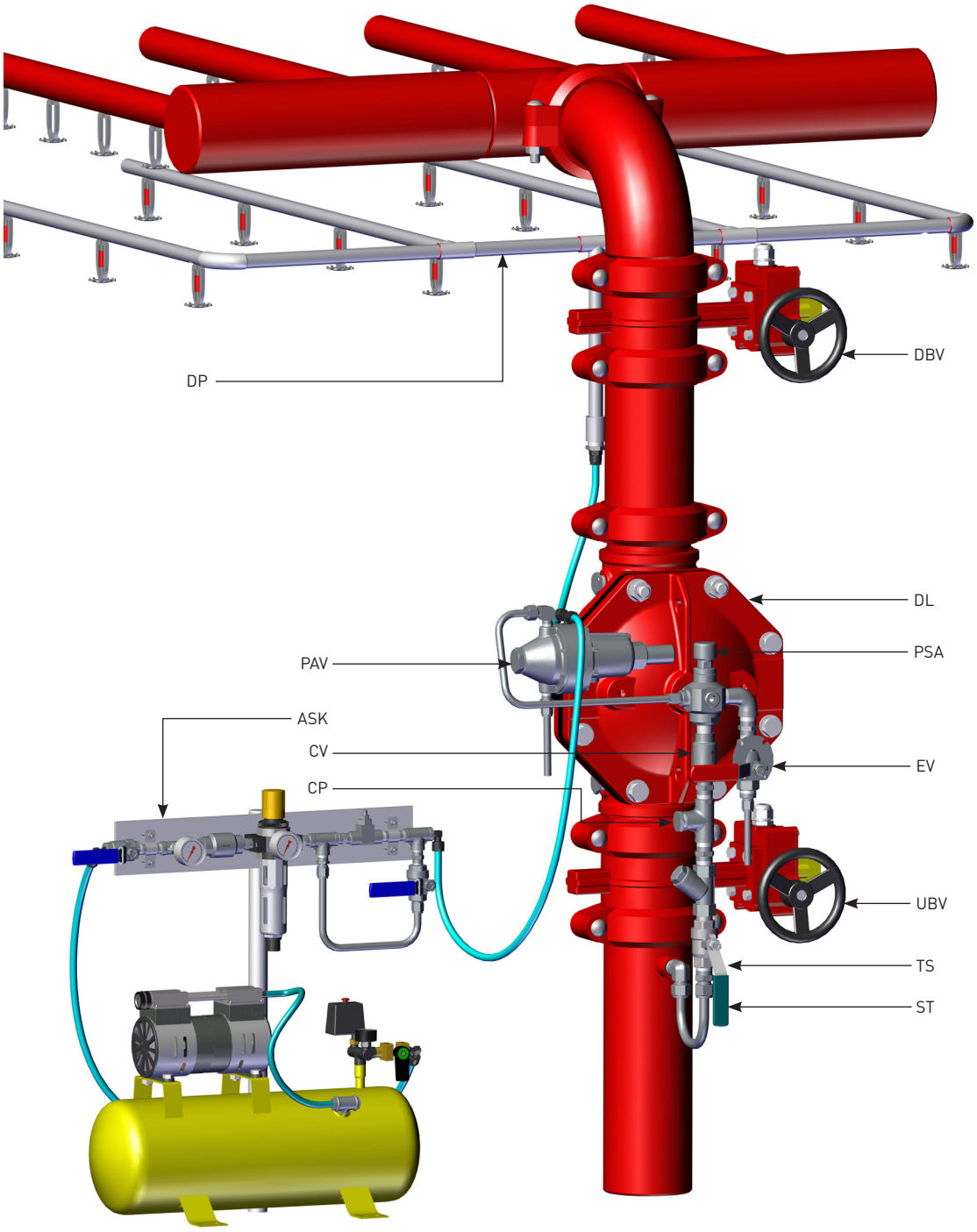

TS – Trim Supply
DL – Deluge valve
ST – Strainer
CV – Check Valve
EV – Emergency Valve
CP – Pressure gauge Connection
PAV – Pneumatic Actuator Valve
PSA – Pressure Supply Arrestor
ASK – Air Supply Kit
DP – Dry Pilot line
UBV – Upstream Butterfly Valve
DBV – Downstream Butterfly Valve

Parametric drawing:

FDV-AP0

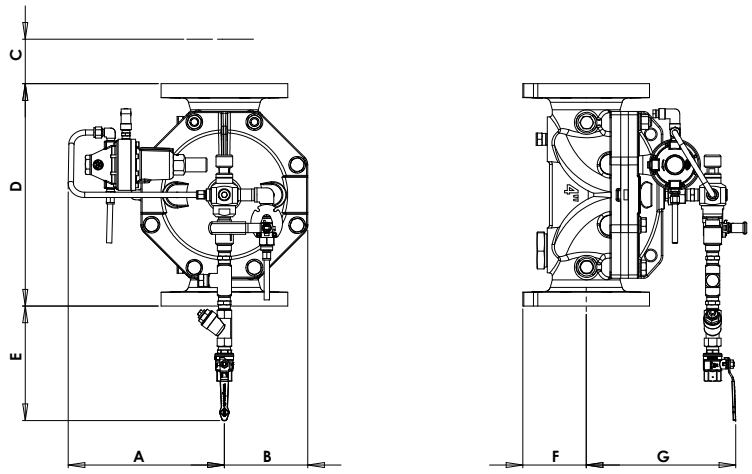

Dimensions Table

Size	1½"		2"		3"		4"		6"		8"		10"	
	mm	inch	mm	inch	mm	inch	mm	inch	mm	inch	mm	inch	mm	inch
A	195	7.6	206	8.1	238	9.4	280	11	305	12	306	12	390	15.3
B	105	4.1	105	4.1	116	4.6	150	5.9	177	6.7	231	9	308	12.1
C	46	1.8	42	1.6	22	0.8	45	1.7	N/A	N/A	N/A	N/A	N/A	N/A
D	204	8.0	220	8.6	324	12.7	400	15.7	464	18.2	570	22.4	766	30.1
E	305	12	295	10.1	243	9.6	206	81	174	6.8	117	4.6	22	0.8
F	52	2	58	2.3	74	2.9	114	4.5	141	5.5	172	6.7	203	8
G	227	8.9	223	8.8	252	9.9	288	11.3	356	14	387	15	479	1.6
Kg/lb	10	22	11.3	25	20	44	45	99	55	121	100	220	230	507

Factory Standard

MAIN VALVE

BODY & COVER

- Ductile iron
- Cast Steel WCB
- Stainless Steel CF8
- Stainless Steel CF8M
- Nickel Aluminum Bronze

ELASTOMERS:

- NBR, 3-layered reinforced Natural Rubber
- EPDM, 3-layered reinforced

COATING:

- Base layer – high built Epoxy FBE
  Top layer – electrostatic Polyester powder RAL 3000
- Rilsan Polyamide based (Nylon 11)
- Internal – vitreous Enamel
  External – Epoxy/Polyester powder RAL 3000

TRIM

PIPING & TUBING:

- Stainless Steel 316
- Copper/Brass
- Cupro-Nickel
- Monel®

FITTINGS:

- Stainless Steel 316
- Brass
- Super Duplex
- Cupro-Nickel
- Monel®

ACCESSORIES:

- Stainless steel CF8M / 316
- Brass
- Nickel Aluminum Bronze
- Cupro-Nickel
- Monel®

PLEASE SPECIFY

- Working Media
- Ambiental conditions
- Min/Max operating flow
- Min/Max operating pressure
- Pneumatic working pressure
- System installation orientation
- Deluge valve ends and standard
- Deluge valve material and coating
- Trim materials
- Additional accessories needed:
  Pressure gauge
  Pressure switch
  Drain valve (manual or automatic)
  Gong

For more detailed technical information, please refer to chapter Engineering Data.

Raphael reserves the right to change the contents without notice