IOM FDV-AC0

ELECTRO-PNEUMATICALLY ACTUATED, LOCAL RESET, ECONOMIC DELUGE VALVE

Installation Operation & Maintenance manual

Fire Protection

RAPHAEL VALVES INDUSTRIES

RAPHAEL FP

IOM FDV-AC0

Electro-Pneumatically Actuated, Local Reset, Economic Deluge Valve

DESCRIPTION

The FDV valve can be supplied in a range of optional materials and coatings suited to specific operating conditions, while the system's operating principle remains unchanged. Two detection systems - pneumatic (dry pilot line) and electric (smoke or heat detectors) - are installed in series and operate a pneumatic actuator.
In a fire event, either detection system can activate the pneumatic actuator, which then drains the FDV control chamber and opens the deluge valve.
Manual actuation through the emergency valve overrides all conditions and opens the deluge valve immediately. The system includes a PSA device that functions both as a local reset mechanism and as a hydraulic actuator.
This configuration is suitable for sprinkler systems equipped with open nozzles.

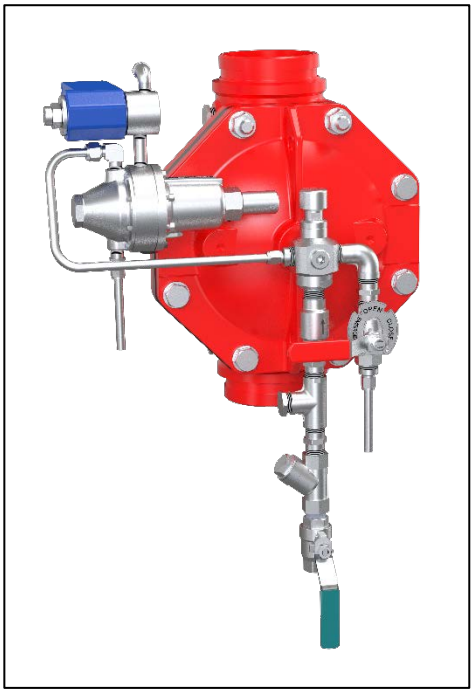

PARTS LIST

Electro-Pneumatically Actuated, Local Reset, Economic Deluge Valve

1. Solenoid valve (3 way)
2. PAV-2 Pneumatic actuator
3. Check Valve
4. "Y" Strainer
5. Trim supply valve (1/2" NPT female)
6. Control chamber pressure gauge port (1/2" NPT female, plugged)
7. Manual Emergence valve
8. PSA Pressure Supply Arrestor
9. FDV deluge valve
10. Dry pilot & air supply connection (1/4" NPT female, temporary plugged).
11. PAV-2 vent port (1/4" NPT)
12. Downstream side port (1/2" NPT plugged) - **List[1]**
13. Downstream bottom drain port (1/2" NPT plugged) - **List[1]**
14. – Upstream bottom Drain port (plugged) **List[2]**
15. – Upstream side port (1/2" NPT plugged) - **List[2]**

Lists of optional accessories for plugged ports:

List[1] – Downstream pressure gauge, WMA – water motor alarm, MADV – manual automatic drain valve, drain valve.

List[2] - Upstream pressure gauge, Drain valve

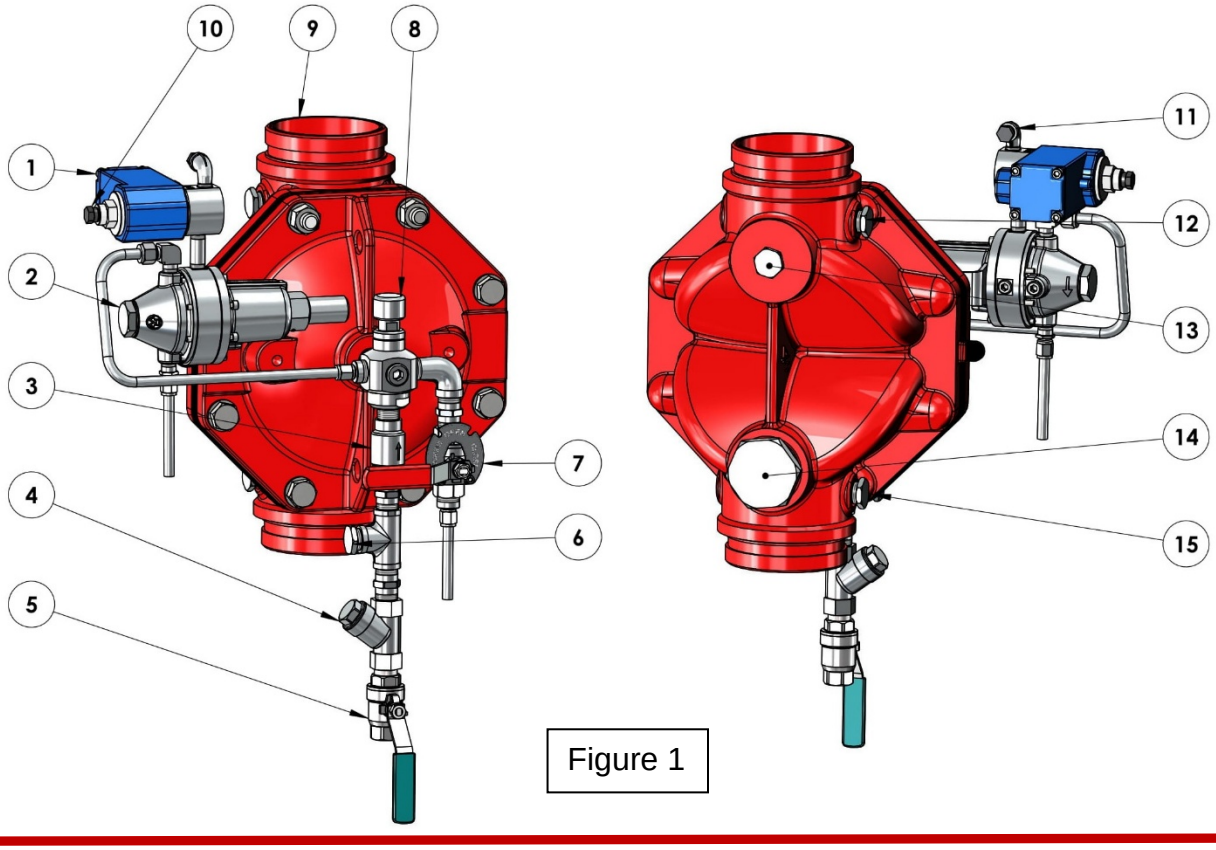

Figure 1

RAPHAEL FP

OPERATION (Reference Figure 1)

SET Position

Water is supplied through the trim pressure supply valve (5), passes the “Y” strainer (4) and the check valve (3), enters the PSA (8) while its push button is pressed, and fills the FDV control chamber.

Pressurized water in the FDV control chamber is retained by the PSA (8) once its push button is released, as well as by the check valve (3), the closed pneumatic actuator PAV-2 (2), and the closed emergency valve (6), thereby keeping the deluge valve in the closed position.

The PAV-2 actuator’s sensing chamber is subjected to constant pneumatic pressure via the dry pilot line and the air-supply connection port (10), which keeps the actuator in its CLOSED state and blocks the FDV drain line.

Fire Situation

When one or more automatic sprinklers on the dry pilot line is exposed to fire, it opens and the pneumatic pressure vents to the atmosphere.

As its sensing chamber depressurizes, the PAV-2 (2) shifts to its OPEN state and drains the FDV control chamber through the PAV-2 drain tube to the atmosphere. Consequently, the FDV deluge valve opens and admits water into the open spray-nozzle pipeline(s).

The resulting pressure drop in the control chamber causes the PSA (8) to prevent upstream flow from re-pressurizing the control chamber, thereby preventing valve closure. As a result, the FDV deluge valve remains latched open. Alternatively, if a heat or smoke detector senses flame heat, it transmits an electric signal to the main control board, which then energizes the solenoid valve. When energized, the solenoid opens and vents the pneumatic pressure from the PAV-2 sensing chamber through vent port (11), causing the PAV-2 actuator to open. Consequently, the FDV deluge valve opens and admits water into the open spray-nozzle pipeline(s). The PSA functions as a latching device as described above.

Reset Position

The upstream butterfly valve must be closed, and all sprinklers in the dry pilot line that have opened must be replaced. This allows the dry pilot line and the PAV-2 actuator’s sensing chamber to be re-pressurized. As pressure is restored, the PAV-2 actuator shifts to its CLOSED position and blocks the valve’s control-chamber drain line.

Next, the PSA push button must be pressed to re-pressurize the deluge control chamber and close the valve. The water spray from the open nozzles then stops.

Finally, the upstream butterfly valve must be reopened.

Installation (Reference Figure 2)

1. This system is supplied pre-assembled and factory pre-adjusted. Any change carried out at the system's trim components order, pipes and tubes length or ports for axillary connection sizes, will affect the system operation and therefore, prohibited.

2. The system cannot be installed at a location where it might be subjected to freezing temperatures.

3. Maintaining sufficient room around the system location ensures operational safety, and ease of maintenance.

4. It should be considered that water will be drained during regular maintenance on a routine basis, during periodical tests procedures and when operating in fire situation. Therefore, a drainage plan should be considered.

5. The system described is to be mounted vertically only, as the PSA needs to be positioned vertically only. Systems with identical operation but for horizontal installation are marked with a prefix "H", e.g. HFDV-AC0.

6. The downstream pipeline connected to the FDV valve at a vertical and horizontal mount system must be supported firmly to prevent the pipeline's weight loaded on the system's valve.

7. Any use of pipe/thread reduction-fittings installed at open ports designated for axillary components, (like water motor alarm, trim pressure supply, FDV valve's drains), is prohibited.

8. All connections to water supply, should be done in accordance with figure 2
   (**5**) – Trim pressure supply connection - ½" NPT female.
   (**11**) – Dry pilot line & ASK supply line to the PAV-2 actuator – ¼" NPT female (temporary plugged).
   (**12**) – list [1] figure 1
   (**13**) – list [1] figure 1
   (**14**) – list [2] figure 1
   (**15**) – list [2] figure 1

9. The FDV valve should be installed with the flow arrow marked on the valve's body, in the proper direction.

10. **Note**: Remove plastic plugs ¼" from the vent elbow (**11**) on the solenoid valve and from the dry pilot & air supply connection (**10**).

11. Before performing the high-pressure leak test, make sure that the butterfly valve or the OS&Y valve upstream of the deluge valve is closed, in order to prevent damage to the diaphragms in the valve and in the trim components.

12. Make sure that the gong connected to its designated outlet is supported so that its weight, along with the weight of the piping attached to it, is not applied to the valve trim.

INSTALLATION PARTS LIST (Reference Figure 2)

Electro-Pneumatically Actuated, Local Reset, Economic Deluge Valve

1. Trim supply valve (1/2" NPT female)
2. "Y" Strainer
3. Check Valve
4. Quick filling valve (orifice bypass)
5. Air supply ball valve on the ASK
6. PAV-2 Pneumatic Actuator Valve 2 way.
7. Solenoid valve, 3-Way, ¼" NPT.
8. Main Control hub
9. Heat / Smoke detection sensors
10. Dry pilot line & Compressor connection port (1/4" NPT female)
11. Downstream separation valve (butterfly or OS&Y valves).
12. PSA – Pressure Supply Arrestor
13. Control chamber pressure gauge port (plugged)
14. Manual Emergency valve
15. Upstream separation valve (butterfly or OS&Y valves).

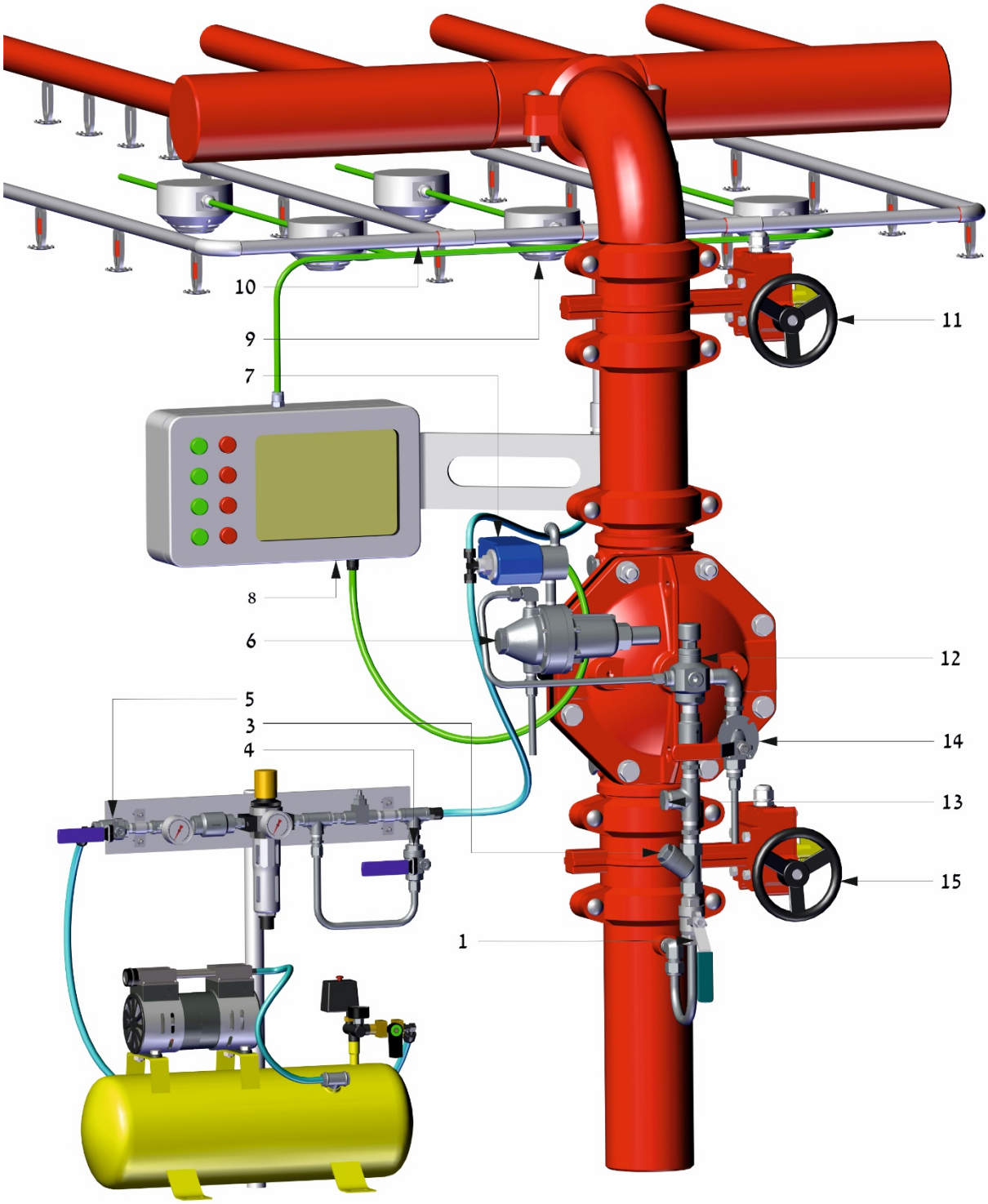

Fig. 2

RAPHAEL FP

OPERATING INSTRUCTIONS (Reference Drawing - figure 2)

Commissioning the system - Phase 1

Filling and pressurizing the system.

The procedure described should be carried out after system installation completion and a comprehensive inspection. (Reference Drawing - figure 2)

1. The filling process is performed only after flushing the pipeline. The flushing needs to be done when both butterfly valves (**11** & **15**) are open, and the trim supply valve (**1**) is close.

2. After flushing, close the upstream butterfly valve (**15**).

3. Close the trim pressure supply ball valve (**1**).

4. Make sure that the Emergency valve (**14**) is closed.

5. Pressurize the pilot line to the rated pressure. No adjustments to the PAV-2 (**6**) actuator are needed as the device is factory set.

6. Close downstream separation butterfly valve (**11**) and open the FDV's downstream drain valve if equipped or unscrew the port's plug (**13 figure 1**). The Upstream drain remains plugged, or its valve (if equipped) - close.

7. Open the trim pressure supply valve (**1**). Press the PSA (**12**) push button for about 5-15 seconds and fill the trim and FDV's control chamber.

8. Open gradually the upstream butterfly valve (**15**).

9. Observe the downstream drain port (**13 figure 1**): there should be no leakage or dripping.

The system is ready for the "**fire situation simulation**".

RAPHAEL FP

Commissioning the system - phase 2.

Fire Situation Simulation (Reference Drawing - figure 2)

The procedure described should be carried out after the system was pressurized and a comprehensive leakage inspection was commissioned.
Energizing the solenoid can simulate a fire situation and cause the system to response by opening the FDV deluge valve.

NOTICE:

Prior to any stoppage of the fire protection system, a fire patrol should be placed in the area covered by the interrupted system.

Prior to generating any test procedures, turning on false alarms or turning off the alarm system, the local safety personnel and the close central fire station must be reported.

(Reference drawing - figure 2)

1. Make sure the downstream separation valve (**11**) is close.
2. Make sure that the downstream drain port (**13 figure 1**) is open (unplug the port).
3. **Actuated by the dry pilot line**: Open the inspector's valve (at the end of the dry pilot line – not illustrated) and vent the pilot line. The pilot's pressure drop will cause the PAV-2 (**6**) actuator to open and drain the FDV's control chamber. Consequently, the FDV deluge valve will open.
4. Observe the downstream drain port: A significant stream of water should flow out of this valve. If ok, close the inspector's valve at the end of dry pilot line and wait until the line gets pressurized to air set pressure. The process can be expedited by temporarily opening the needle valve bypass ball valve (**4**) at the ASK (Air Supply Kit).
5. **Actuated by the Heat/Smoke detection sensors**: initiate a fault alarm for the Heat/Smoke detection sensors at the control board. The solenoid valve (**7**) needs to be energized and the pressurized air in the pilot pipeline needs to be vented through the PAV-2 vent port (**11** figure **1**)
6. Consequently, the FDV valve will open, and a significant stream of water should flow out of the downstream drain port.

The system is ready for re-setting and placing in service.

RAPHAEL FP

Commissioning the system - phase 3.

Resetting & placing in service

The procedure described should be carried out after any periodic operational test - simulated or real fire situation. After a real fire situation, replace all blown-open sprinklers before pressurizing the pilot line.

Resetting after a Fire Situation <u>Simulation</u>:

1. Close the Upstream Butterfly Valve (**15**)
2. Close the trim pressure supply (**1**).
3. Close the inspector's valve (at the end of dry pilot line **10**) and / or turn off the fault alarm for the Heat/Smoke detection sensors (**9**) at the main control board. Make sure the dry pilot line became pressurized to set pressure.
4. Disassemble the "Y" strainer (**2**) and clean its screen. Re-assemble the strainer.
5. Open the pressure supply valve (**1**) and press the PSA (**12**) push button for about 5-15 seconds. Temporary open the downstream drain port and make sure there is no leakage or dripping. If ok, screw in its plug.
6. The Upstream Butterfly valve (**15**) and the downstream butterfly valve (**11**) should be opened gradually.

Resetting after a <u>Real</u> Fire Situation:

1. Close the Upstream Butterfly Valve (**15**)
2. Close the trim pressure supply (**1**).
3. Close the air supply ball valve at the ASK (**5**)
4. All the Dry pilot line's blown-open sprinklers must be replaced.
5. When done, open the air supply ball valve at the ASK (**5**). The dry pilot line needs to be pressurized to set pressure. The process can be expedited by temporarily opening the needle valve bypass ball valve (**4**) at the ASK.
6. Disassemble the "Y" strainer (**2**) and clean its screen. Re-assemble the strainer.
7. Open the pressure supply valve (**1**). and press the PSA (**12**) push button for about 5-15 seconds.
8. Open the Upstream Butterfly valve (**15**) gradually, then open the downstream butterfly valve (**11**) and plug the downstream drain port.

The system is in SET state and placed in service.

MAINTENANCE

Prior to any stoppage of the fire protection system, a fire patrol should be placed in the area covered by the interrupted system.
Prior to generating any test procedures, turning on false alarms or turning off the alarm system, the local safety personnel and the close central fire station must be notified.
The Maintenance and inspection procedures are based on the relevant chapters at NFPA 25.

Daily Inspection

Make sure that the deluge valve's heating system (If equipped), functions correctly and that the Fire protection valve surrounding temperature is 4°C min.

Monthly Inspection

1. Observe the FDV deluge valve and its trim for external damage: observe the trim piping and hose connections for leakage or damage.

2. Verify that the upstream and downstream separation butterfly valves (**15** & **11**) and the Trim pressure supply valves (**1**) are in fully open position.
   Downstream drain valve and upstream drain valve (if equipped) are fully close.

3. Press the PSA push button about 5-10 seconds and release. Make sure that the required supply water pressures are applied to the deluge Valve inlet and trim.

4. Unscrew the downstream bottom drain plug (or open its valve if equipped) and make sure that after emptying condensing water, the drain flow/dripping stops. If a constant leakage is observed, it might indicate a deluge valve sealing problem.

Annual test procedure

1. Conduct the monthly test & inspection procedure.

2. Perform the procedure described in chapter - **Commissioning the system - phase 2. -** Fire Situation Simulation. Check the system's proper operation.

3. Follow the procedure described in chapter - **Commissioning the system - phase 3.** - Resetting & placing in service, chapter ***Resetting after a Fire Situation Simulation.***

Every 5 years inspection procedure

This major inspection and maintenance procedure includes the removal of the trim, the dismantling of the FDV's valve cover and performance of a comprehensive internal part examination. Then, the relevant trim accessories should be replaced, after completion, the Annual maintenance procedure is to be conducted.

1. Close the upstream butterfly valve (**15**) and the trim pressure supply valve (**1**).

2. Open the downstream and upstream drain ports or valves if equipped. Drain the FDV's control chamber using the Emergency valve (**14**).

3. Turn off or disconnect all relevant electrical circuits.

4. Release all relevant tubes, fitting nuts and the central union pipe connection (if equipped) at valves cover center.

5. Remove and disassemble front trim.

6. Remove all the FDV's cover bolts. The cover will hang on its studs (4" DN100 valve size and up). Release both nuts and remove the cover carefully.

7. Observer the internals of the valve and cover for excessive scale residuals, foreign particles, damaged coating (rust, cracks, or pealing).

8. Worn or damaged parts should be replaced. Consult Raphael's local representative or the service department for any maintenance issue or part replacement issue.

9. Replace the Diaphragm. The identification tongue should point to the valve's stamped size side (from top view – at the left side).

10. Reinstall the valve's cover: use the Anti-seize paste supplied in the maintenance kit for bolts and nuts pre-installation lubrication. Tight it in accordance with **"Bolt's torque moments table".**

11. Reinstall the front trim carefully: avoid causing twists or dents on bent tubes and do not overtight the compression fitting's nuts.

12. When the system is fully re-assembled, perform the "**Commissioning the system - phase 1** - Filling and pressurizing the system" procedure.

13. Perform the **Annual test procedure.**

Bolt's Torque Moments Table

Valve size	1.5"	2"	2.5"	3"	4"	6"	8"	10"
Torque lb/ft	22	29	36	54	65	72	87	118

Equivalent pipe length for FDV deluge valves

Valve size	1.5"	2"	2.5"	3"	4"	6"	8"	10"
Equivalent length value ft (m)	11 (3.6)	24 (7.3)	25 (7.6)	28 (8.5)	31 (9.4)	46 (14)	72 (21.9)	117 (35.6)

RAPHAEL FP

MARKING

The FDV valves are marked by a laser engraved, black anodized, 0.8mm (0.031”) thick metal plate, riveted to the valve’s cover.

- *Company name and trademark.*
- *Short description (Italic letters)*
- *Application’s type*: **FDV-AC0** – Electric / Pneumatic actuated, Local Reset.
- (P/N) *The Application’s part number*: System properties–Valve properties
- *Rated pressure*: 250 psi
- *Equivalent Length:* reference table - page 12.
- *Serial Number*: Work order number-MM-YY-Number in batch 01-99
- *The Application’s* diameter in inch: XX”

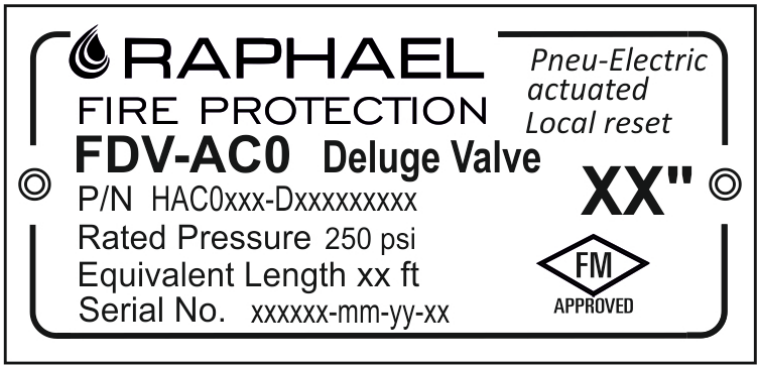

RAPHAEL FP

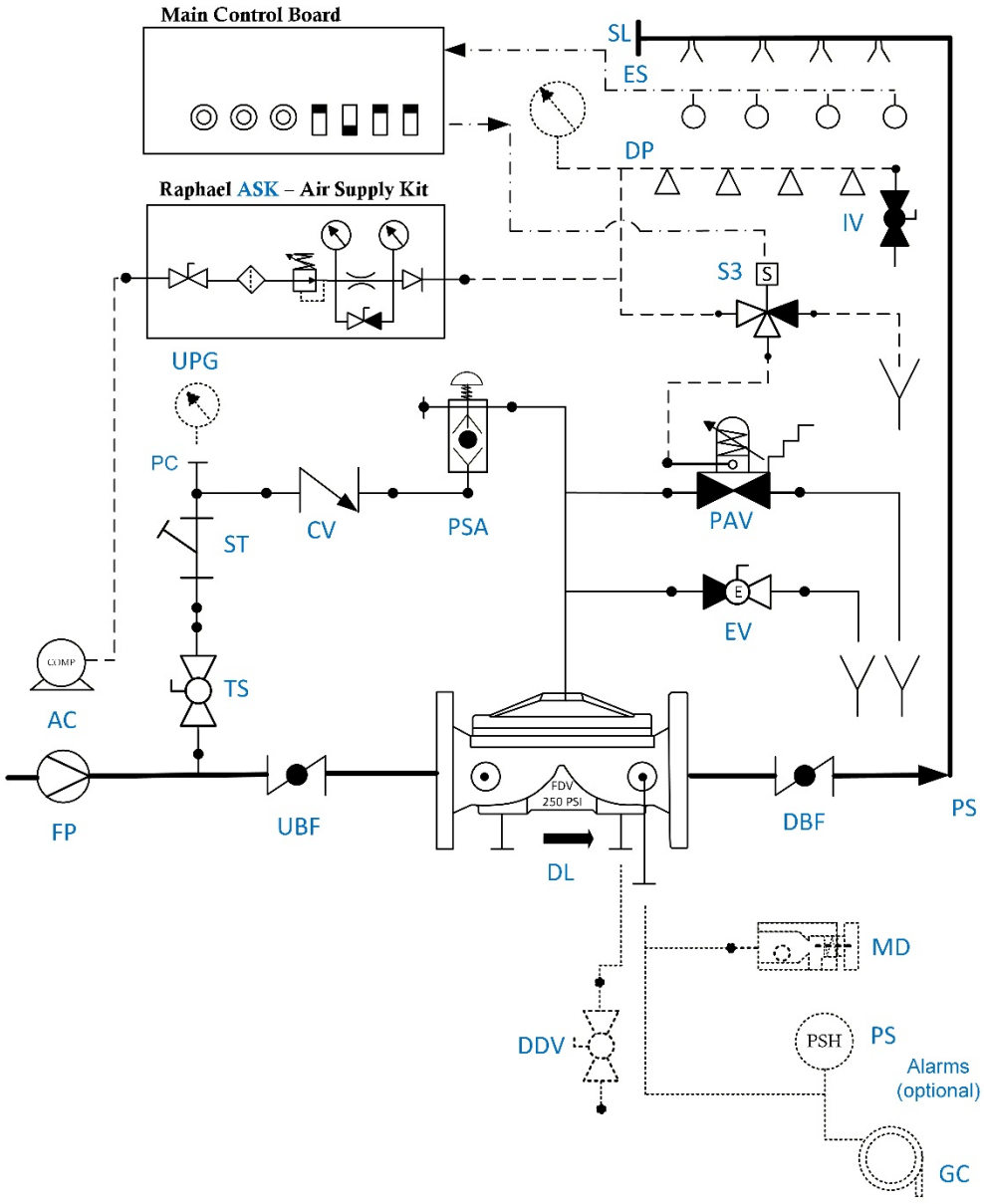

TS -	Trim supply	DL -	Deluge Valve		Water lines
ST -	Strainer	SL -	Sprinkles Line		Air line
PSA -	Pressure Supply Arrestor	PC -	Pressure Gauge Connection		Optional
PAV -	PAV2 – Pneumatic Actuator Valve	IV -	Inspector's valve		Electric wire
CV -	Check Valve	ES -	Electrical Sensors		
UBF -	Upstream Butterfly Valve	AC -	Air Compressor	Optional	
DBV -	Downstream Butterfly Valve	ASK -	Air Supply Kit	DDV -	Downstream Drain Valve
S3 -	3-way solenoid valve			PS -	Pressure Switch
EV -	Manual Emergency Valve			MD -	Drain Valve
DP -	Dry Pilot Line			UPG -	Upstream pressure gauge
FP -	Fire Pump			GC -	Gong connection

RAPHAEL, founded in 1949, is the first Israeli manufacturer of water control valves. RAPHAEL´s research department constantly strives to introduce new and innovative products and solutions for water control systems including water works, fire-protection and irrigation systems.



RAPHAEL

RAPHAEL Valves Industries (1975) Ltd.

North Industrial Zone Or Akiva, 3063927 P.O.Box 555, Israel

Tel. +972 4 6263555 | info@raphael-valves.com | raphael-valves.com

Nov-25