Electro-Pneumatically Actuated, Local Reset, Economic Deluge Valve

FDV-AC0

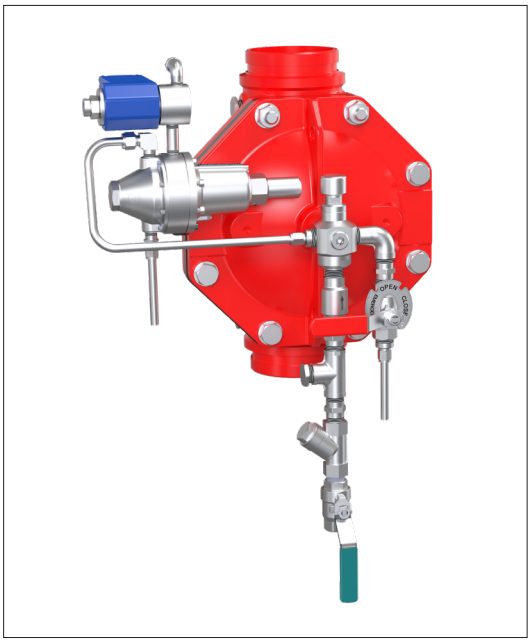

The FDV-AC0 fire protection system is based on Raphael's FDV deluge valve and is equipped with a pneumatically and electrically actuated control trim.

The FDV is a fire protection control valve for deluge sprinkler systems, specifically designed for installation in hazardous environments. It is suitable for both vertical and horizontal installations and features a globe-pattern, line-pressure-operated design with a direct elastomeric diaphragm seal. The valve contains no balancing spring and no internal metallic components in the wetted area. Its hydrodynamic flow path ensures high flow rates with minimal head loss.

The FDV-AC0 Deluge system can be actuated both pneumatically and electrically, and it resets locally. In the event of a fire, when the pneumatic dry pilot detection line is exposed to heat, one or more of its automatic fire sprinklers shatter, releasing the air pressure from an actuator and causing the deluge valve to open. Alternatively, when a sensor of the electrical detection system activates the main control board, it opens a solenoid valve that vents the dry pilot line, thereby opening the deluge valve.

The system also incorporates an emergency valve that bypasses the fire detection systems for manual operation. Additionally, the trim is equipped with a PSA device, which enables local reset of the system—that is, closing the FDV valve locally by pressurizing its control chamber.

This system is suitable for use with automatic sprinklers on the dry pilot pipeline and with open nozzles on the main spraying pipelines.

MARKETS

Commercial
Industry
P.O.G.
Storage
Residential
Airport

TECHNICAL DATA

FLUID:
Water, Brackish water, Sea water, Foam

SIZE RANGE:
40mm to 250mm (1½'' to 10")

AVAILABLE CONNECTIONS ENDS:
Flange*Flange, Groove*Groove, Flange*Groove, Groove*Flange, Thread*Thread

PRESSURE NOMINAL:
250 psi (17.2 bar)

PNEUMATIC PRESSURE:
29-58 psi (2-4 bar)

APPROVALS

FM APPROVED

ADVANTAGES

- Ony three parts: body, diaphragm & cover plate. No wet metal spring inside the control chamber.
- Full-bore, unobstructed design.
- Simple manual reset to the standby position without draining or opening the valve, and without closing the OS&Y or other system valves.
- Full anti-columning capability allows virtually unlimited pilot line height.
- Fail-safe, open-type valve maintained in the standby closed position by the PSA.
- Low maintenance cost: the valve can be serviced in-line and includes only one replaceable part — a long-life elastomeric diaphragm.
- Complies with NFPA 25, the standard for the inspection, testing, and maintenance of water-based fire protection systems.

CHARACTERISTICS

- Hydrodynamic flow-pattern design ensures high flow rates with minimal head loss.
- The valve trips open automatically upon a gradual release of water pressure from its control chamber. The trip is actuated by the pneumatic pressure release of the Dry Pilot Line, caused by exposure to flame heat or by an electric sensor tripped by the fire heat.
- Soft closing, achieved by pressurizing the valve's control chamber with line pressure or another independent water source, prevents surges.

The FDV-AC0 resets to the standby closed position by pressurizing the Dry Pilot Line, de-energizing the solenoid valve through the control bord and manually operating the PSA device.

Schematic drawing: FDV-AC0

Set position

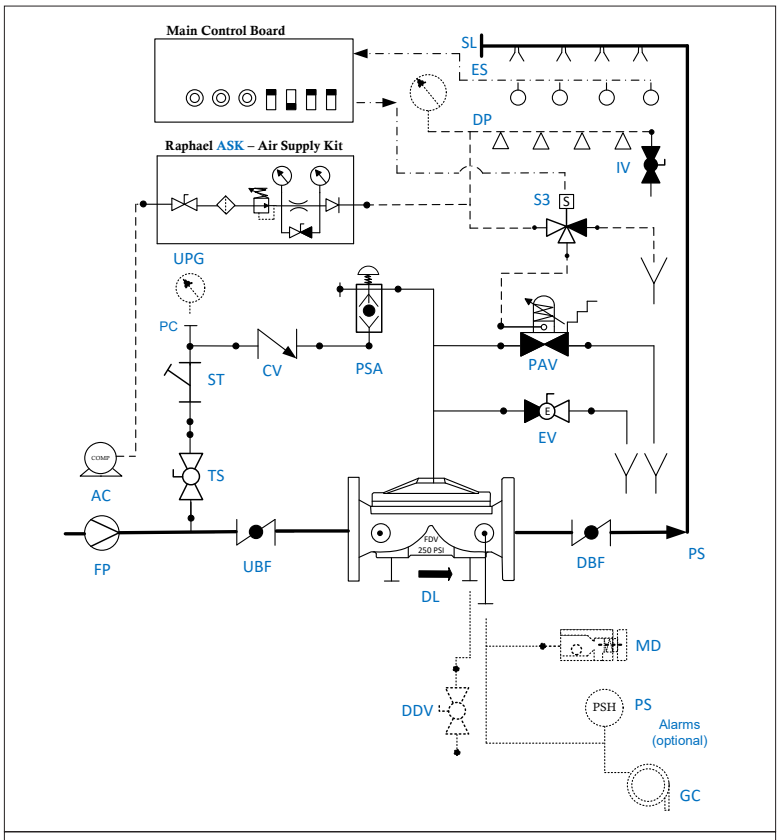

TS -	Trim supply	DL -	Deluge Valve		Water lines
ST -	Strainer	SL -	Sprinkles Line		Air line
PSA -	Pressure Supply Arrestor	PC -	Pressure Gauge Connection		Optional
PAV -	PAV2 – Pneumatic Actuator Valve	IV -	Inspector's valve		Electric wire
CV -	Check Valve	ES -	Electrical Sensors		
UBF -	Upstream Butterfly Valve	AC -	Air Compressor	Optional	
DBV -	Downstream Butterfly Valve	ASK -	Air Supply Kit	DDV -	Downstream Drain Valve
S3 -	3-way solenoid valve			PS -	Pressure Switch
EV -	Manual Emergency Valve			MD -	Drain Valve
DP -	Dry Pilot Line			UPG -	Upstream pressure gauge
FP -	Fire Pump			GC -	Gong connection

OPERATION

SET POSITION

Pressurized water in the valve control chamber is retained by the check valve (CV), the closed pneumatic actuator (PAV), and the closed emergency valve (EV). Air pressure accumulated in the Dry Pilot detection line (DP) is transferred to the actuator through the 3-way solenoid valve (S3), the Deluge Valve (DL) closed.

FIRE SITUATION

When automatic sprinklers in the Dry Pilot detection line (DP) are exposed to fire and operate, the pilot line depressurizes, opening the actuator (PAV). Alternatively, the electrical detection system (ES) signals the main control board, which energizes the 3-way solenoid valve (S3). The solenoid valve bypasses the pilot line, depressurizes the actuator (PAV), and causes it to open. The FDV-AC0 control chamber drains, and the Deluge Valve (DL) opens.

RESET POSITION

System reset requires replacement of all operated sprinklers in the detection pilot line (DP). If the electrical alarm system was activated, it must be reset and the solenoid de-energized. The Dry Pilot line and the actuator control chamber (PAV) must then be re-pressurized by operating the PSA push button until the set pneumatic pressure is restored.

Raphael reserves the right to change the contents without notice

FDV-AC0

Typical installation

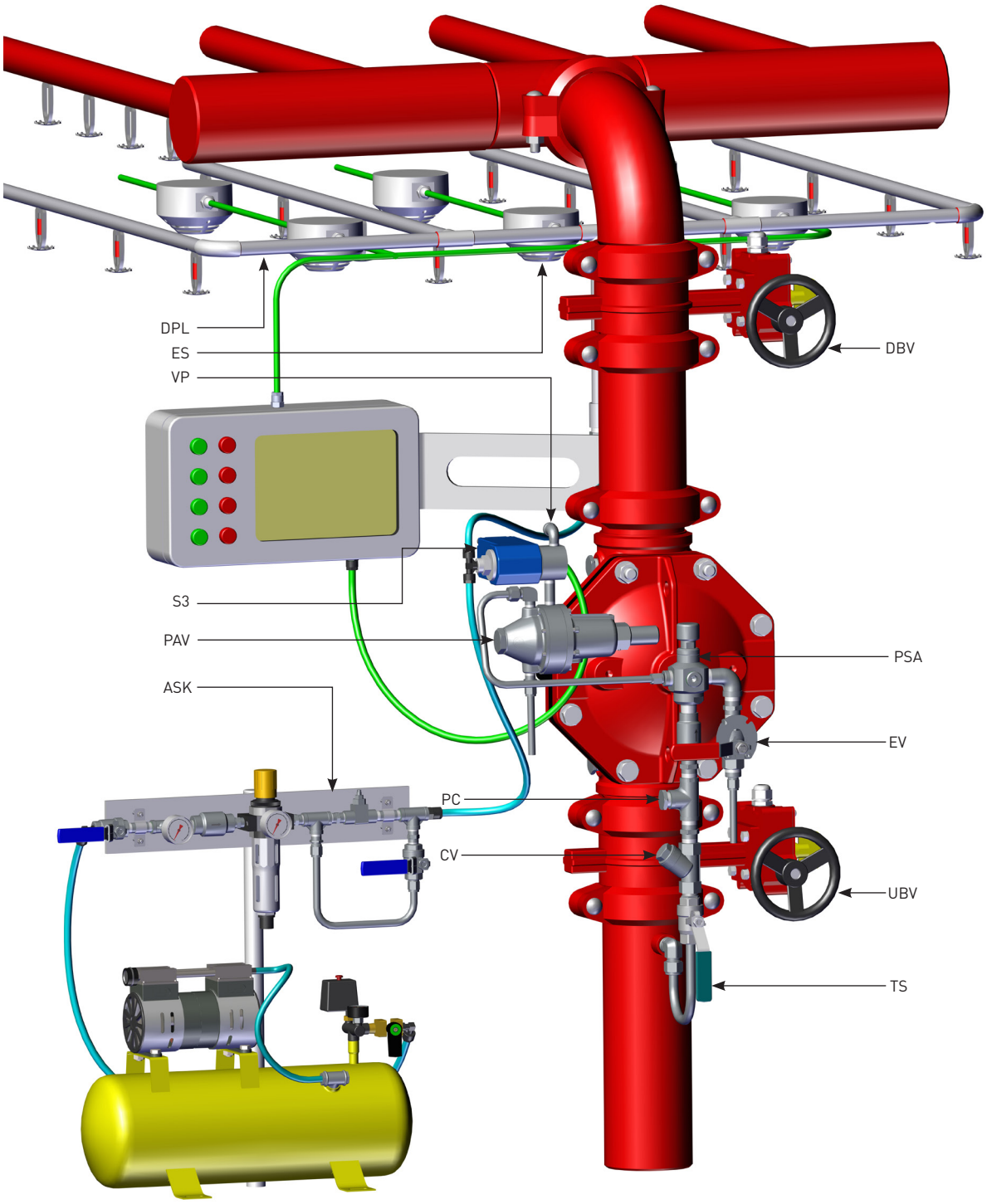

TS – Trim Supply
ST – Strainer
CV – Check Valve
S3 – 3-way solenoid valve
EV – Emergency Valve
VP – Venting Port
CP – Pressure gauge Connection
PAV – Pneumatic Actuator Valve
PSA – Pressure Supply Arrestor
ASK – Air Supply Kit
DPL – Dry Pilot line
UBV – Upstream Butterfly Valve
DBV – Downstream Butterfly Valve

Parametric drawing:

FDV-AC0

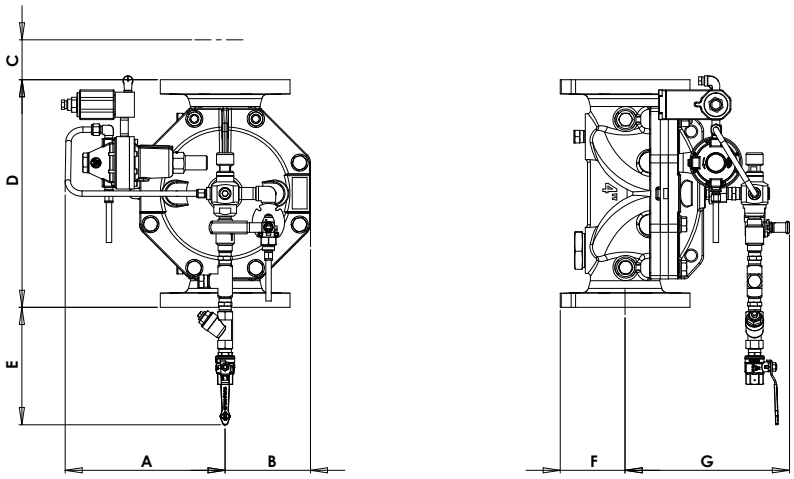

Dimensions Table

Size	1½"		2"		3"		4"		6"		8"		10"	
	mm	inch	mm	inch	mm	inch	mm	inch	mm	inch	mm	inch	mm	inch
A	195	7.6	206	8.1	238	9.4	280	11	305	12	306	12	390	15.3
B	105	4.1	105	4.1	116	4.6	150	5.9	177	6.7	231	9	308	12.1
C	96	3.8	92	3.6	72	2.8	7	0.3	N/A	N/A	N/A	N/A	N/A	N/A
D	204	8.0	220	8.6	324	12.7	400	15.7	464	18.2	570	22.4	766	30.1
E	305	12	295	10.1	243	9.6	206	81	174	6.8	117	4.6	22	0.8
F	52	2	58	2.3	74	2.9	114	4.5	141	5.5	172	6.7	203	8
G	227	8.9	223	8.8	252	9.9	288	11.3	356	14	387	15	479	1.6
Kg/lb	10.3	22.7	12.2	26.9	29.5	65	45.3	100	56	123	101	222	230	507

Factory Standard

MAIN VALVE

BODY & COVER

- Ductile iron
- Cast Steel WCB
- Stainless Steel CF8
- Stainless Steel CF8M
- Nickel Aluminum Bronze

ELASTOMERS:

- NBR, 3-layered reinforced Natural Rubber
- EPDM, 3-layered reinforced

COATING:

- Base layer – high built Epoxy FBE
  Top layer – electrostatic Polyester powder RAL 3000
- Rilsan Polyamide based (Nylon 11)
- Internal – vitreous Enamel
  External – Epoxy/Polyester powder RAL 3000

TRIM

PIPING & TUBING:

- Stainless Steel 316
- Copper/Brass
- Cupro-Nickel
- Monel®

FITTINGS:

- Stainless Steel 316
- Brass
- Super Duplex
- Cupro-Nickel
- Monel®

ACCESSORIES:

- Stainless steel CF8M / 316
- Brass
- Nickel Aluminum Bronze
- Cupro-Nickel
- Monel®

PLEASE SPECIFY

- Working Media
- Ambiental conditions
- Min/Max operating flow
- Min/Max operating pressure
- Pneumatic working pressure
- System installation orientation
- Additional accessories needed

For more detailed technical information, please refer to chapter Engineering Data.

Raphael reserves the right to change the contents without notice