IOM FDV-AA0

HYDRAULICALLY ACTUATED, LOCAL RESET, ANTI-COLUMNING ECONOMIC DELUGE VALVE

Installation **O**peration & **M**aintenance manual

Fire Protection

RAPHAEL FP

RAPHAEL VALVES INDUSTRIES

IOM FDV-AA0

Hydraulically Actuated, Local Reset, Anti-columning Economic Deluge Valve

DESCRIPTION

This FDV is a fire-protection control valve for deluge fire-sprinkler systems, designed for installation in hazardous environments.
It is suitable for both vertical and horizontal installation and features a globe-pattern, line-pressure-operated design with a direct elastomeric-diaphragm seal. The valve contains no balancing spring and no internal metallic components in the wetted area. Its hydrodynamic flow path provides high flow rates with minimal head loss.

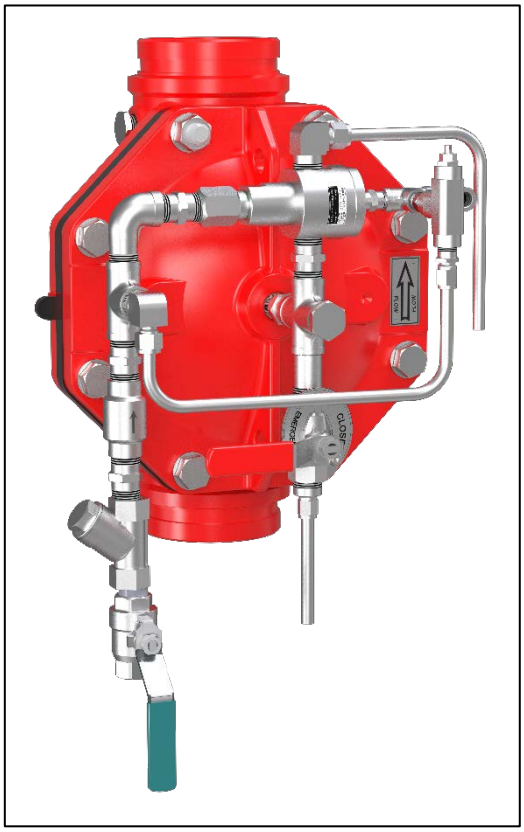

The FDV-AA0 deluge system is hydraulically actuated and reset locally.
When a hydraulic detection system – a wet-pilot detection line – is exposed to a predetermined temperature, the automatic fire sprinklers open, causing a pressure drop that activates a pilot valve, which in turn commands the FDV-AA0 deluge valve to open. The anti-columning feature ensures reliable system operation regardless of the detection line's height or its distance from the control valve. The deluge system also incorporates an emergency valve that bypasses the fire-detection system for manual operation. In addition, the FDV-AA0 system is equipped with a PSA device that manually and locally pressurizes the deluge-valve control chamber and the wet-pilot line. This keeps the valve closed, prevents re-pressurization during actuation (when the control chamber must remain drained), and compensates for pressure losses caused by minor leaks.

This configuration is suitable for open-nozzle water-spray pipelines.

RAPHAEL FP

PARTS LIST

Hydraulically Actuated, Local Reset, Anti-columning Economic Deluge Valve

1. FDV deluge valve
2. Wet Pilot connection
3. Needle Valve
4. DCPV Piot
5. Control Chamber PG connection. (½" NPT female)
6. Trim pressure supply
7. "Y" Strainer
8. Check Valve
9. Emergence Valve
10. PSA (latch device)
11. Bottom Downstream Drain Plug
12. Bottom Upstream Drain Plug
13. Upstream side port
14. Downstream side port / Gong connection

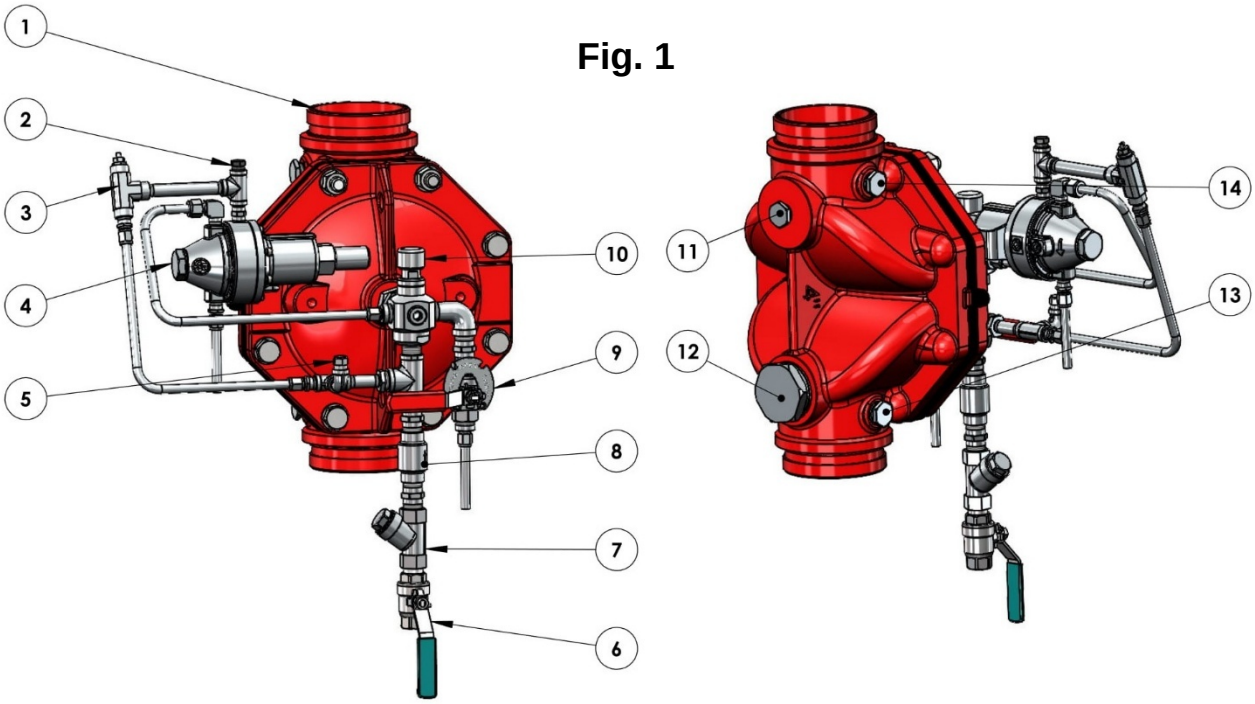

Fig. 1

OPERATION (Reference Figure 1)

SET position:

Water is supplied by the Trim pressure supply valve (**6**) via the "Y" strainer (**7**), Check valve (**8**), flows through the PSA (**10**), and fills the FDV's control chamber. Pressurized water in the valve's control chamber is trapped by the check-valve (**8**), by the closed emergency valve (**9**), and by the blocked port of the DCPV pilot valve (**4**), maintaining the deluge valve in closed position. The pressurized wet pilot line is connected to the DCPV's sense port (**2**). Its pressure overcomes the pilot valve's spring and holds this N.O. accessory in a close state. If the wet pilot stays pressurized, the FDV valve is close, and the system is in SET position.

FIRE situations:

When one or more automatic sprinklers along the wet pilot line sense fire heat and open, the pressure drops and the horizontal pilot pipeline drains through the opened sprinkler(s). This pressure drop is transmitted to the sense port of the DCPV (**2**). The pilot-valve spring overcomes the reduced wet-pilot-line pressure and shifts the DCPV (**4**) to its OPEN position.

When the DCPV drains the FDV control chamber through its vented port to the atmosphere, the FDV deluge valve opens and allows water to enter the sprinkler spray pipeline(s).

Simultaneously, the pressure drop in the wet pilot line causes the PSA's internal rubber ball to move to its upper sealing seat, preventing upstream flow from entering the FDV control chamber. In doing so, the PSA (**10**) latches the FDV valve in its open position.

Opening the emergency ball valve (**9**) bypasses all conditions, drains the FDV control chamber, and opens the valve immediately.

RESET procedure.

Close the upstream butterfly valve (**7**) or the OS&Y valve to stop the discharge from the open sprinklers.

Close the trim pressure supply valve (**6**) to stop the discharge from the automatic sprinkler(s).

Replace all blown-open automatic sprinklers in the wet pilot line.

Open the inspector valve at the end of the wet pilot line. Then open the trim pressure supply valve (**6**) and observe the water flowing from the inspector valve: drain until the flow is clear and free of air bubbles. Close the inspector valve.

When the wet pilot line is fully pressurized, press the PSA push button (**10**) to fully pressurize the deluge-valve control chamber.

When completed, open the upstream butterfly valve (**7**) or the OS&Y valve.

INSTALLATION (Reference Figure 2)

1. This system is supplied pre-assembled and factory pre-adjusted **except for the DCPV pilot valve**. Any change carried out at the system's trim components order, pipe and tubes length or ports for axillary connection sizes, will affect the system operation and therefore, prohibited.

2. The system cannot be installed at a location where it might be subjected to freezing temperatures.

3. Sufficient room around the system location should be kept, to enable assembly/disassembly and maintenance work.

4. It should be considered that water will be drained during regular maintenance on a routine basis, during periodical tests procedures and when operating in fire situation. Therefore, a drainage plan should be considered.

5. Systems marked with a prefix "H", e.g. HFDV-AA0 are designed to be installed in horizontal orientation.

6. The downstream pipe connected to the FDV valve at a vertical and horizontal mount systems need to be supported firmly to prevent the pipeline's weight loaded on the system's valve.

7. Any use of pipe/thread reduction-fittings installed at open ports designated for axillary components, (like trim pressure supply, FDV valve's drains, DCPC or Emergency valve drain lines), is prohibited.
8. All connections to water supply, alarms etc. should be done in accordance with fig 1:
   – Wet pilot pipeline connection (2).
   – Trim pressure supply connection (6)

9. The FDV valve should be installed with the flow arrow marked on the valve's body, in the proper direction.

10. Before performing the high-pressure leak test, make sure that the butterfly valve or the OS&Y valve upstream of the deluge valve is closed, in order to prevent damage to the diaphragms in the valve and in the trim components.
11. Make sure that the gong connected to its designated outlet is supported so that its weight, along with the weight of the piping attached to it, is not applied to the valve trim.

INSTALLATION PARTS LIST (Reference Figure 2)

Hydraulically Actuated, Local Reset, Anti-columning Economic Deluge Valve

- **TS** – Trimm Supply Valve
- **ST** – Strainer
- **CV** – Check Valve
- **PC** – PG for Control chamber
- **DC** – DCPV
- **NV** – Needle Valve
- **WPC** – Wet pilot connection
- **WP** – Wet pilot
- **UBV** – Butterfly valve
- **EV** – Emergency Valve
- **DL** – Deluge Valve
- **PSA** – Pressure Surge Arrestor
- **DBV** – Downstream Butterfly Valve

RAPHAEL FP

Hydraulically Actuated, Local Reset, Anti-columning Economic Deluge Valve

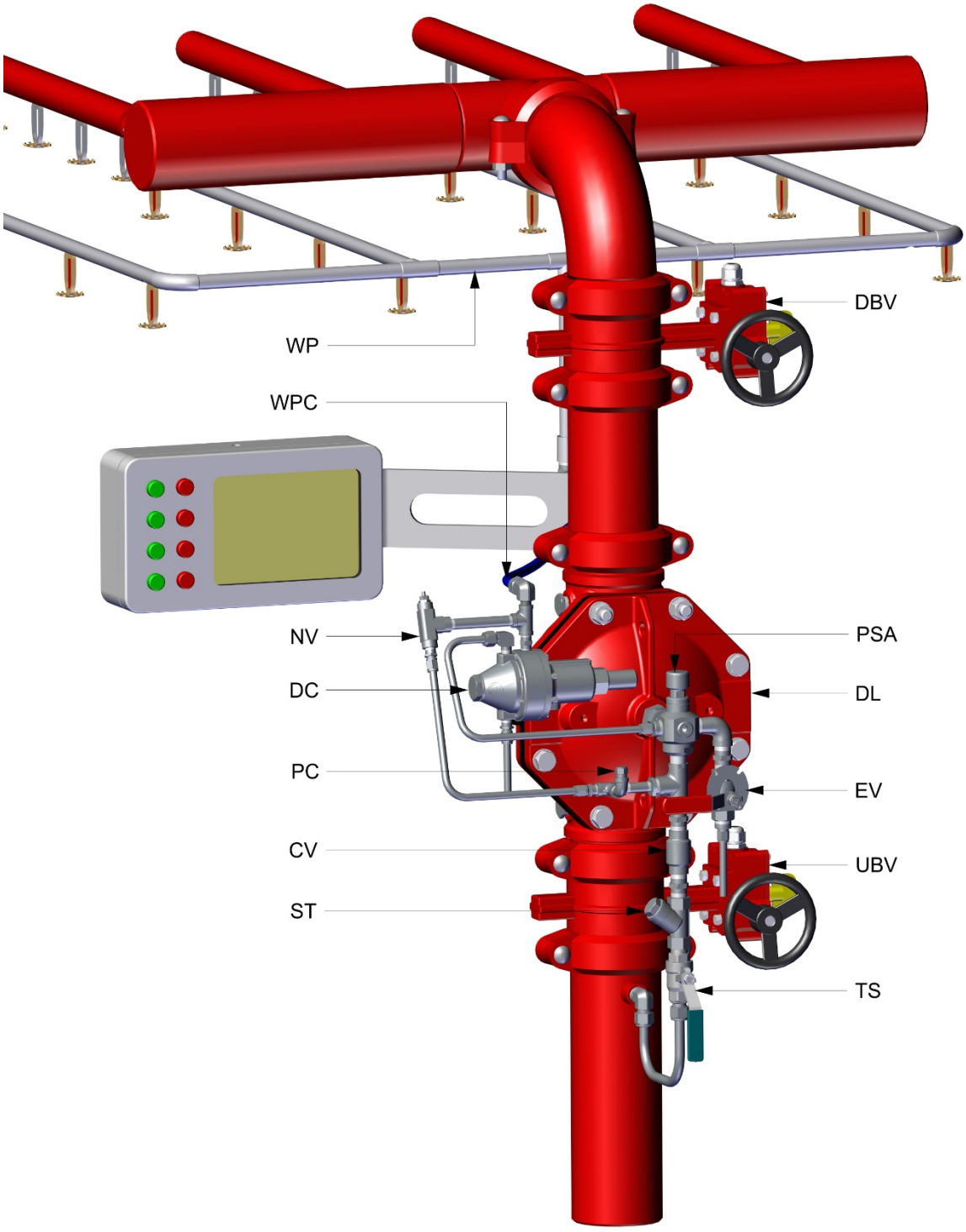

RAPHAEL FP

OPERATING INSTRUCTIONS (Reference Drawing - figure 2)

DCPV Pilot's adjustment procedure:

The procedure described should be carried out after system installation completion and a comprehensive inspection.

(Reference Drawing - figure 2)

1. Make sure the upstream butterfly valve (**UBV**) or OS&Y is fully closed.
2. Open fully the needle valve (**NV**) to speed up the wet pilot filling
3. Unplug the downstream drain plug (**11 figure 1**) of the FDV valve.
4. Make sure the trim pressure supply valve (**TS**) is Closed
5. Make sure that the Emergency valve (**EV**) is fully closed.
6. Loosen completely the DCPV (**DC**) pilot's spring by turning the adjustment screw counterclockwise. This closes the drain passage of the valve and enables the wet pilot line filling and pressurizing.
7. Open the inspector's test valve located at the end of the wet pilot line.
8. Open the trim pressure-supply valve (**TS**). Drain the wet pilot line until a continuous, air-bubble-free flow is observed.
9. Close the inspector's test valve.
10. Close the trim pressure-supply valve, open the strainer's screen plug, and clean the strainer screen. Reinstall the parts and reopen the trim pressure-supply valve.
11. Press the PSA push button (**PSA**) to fill the trim and the FDV control chamber. The FDV deluge valve will then close.
12. Gradually open the upstream butterfly valve (**UBV**) and verify that no water is dripping from the downstream drain port. Any dripping indicates a sealing problem in the FDV that must be corrected.

The system is ready for a leakage inspection.

RAPHAEL FP

Needle Valve (NV) adjustment procedure:

This procedure should be carried out to assure that the needle valve flow rate would not "overcompensate" the pressure drop caused by a blown-open automatic sprinkler. The pressure drop is needed to activate the DCPV pilot and drain the FDV's control chamber.

1. Close the trim pressure supply valve (**TS**)
2. Unscrew the most remote sprinkler at the wet pilot line.
3. Push the PSA (**PSA**) pushbutton consecutively.
4. Open the trim pressure supply valve.
5. Gradually, close the needle valve (**NV**) and observe the DCPV (**DC**) drainage: stop turning the needle valve handle when water drainage starts.
   It means that the needle valve rate of flow does not interfere the drop of pressure caused by the "open sprinkler".
6. After meeting the right needle valve rate of flow, secure the valve's stem by tightening its counter nut.
7. Stop pushing the PSA button when the FDV's control chamber is fully pressurized.
8. Open the upstream butterfly valve (**UBV**) or OS&Y. Check the FDV's open drain port for any leakage. If ok, screw in its plug.
9. Open the downstream butterfly valve.

The system is in Set position.

RAPHAEL FP

Commissioning the system - phase 2.

Fire Situation Simulation

By the drainage of the wet pilot valve, one can simulate a fire situation and cause the system to response by opening the FDV deluge valve.

1. Close the downstream butterfly valve. unplug the downstream drain plug (**11** figure **1**)

2. Open the inspector's valve (located on the wet pilot's pipeline). Trapped water will drain out from the FDV's control chamber through the DCPV pilot's vented port and the FDV valve will open. Water flows out of the open downstream drain valve should be observed.

3. Observe this DCPV drain flow: the flow should run for a few seconds and stop. A drain flow for an extended period or a constant flow can indicate an internal leakage at the PSA.

The valve is ready for Resetting & placing in service

RAPHAEL FP

Commissioning the system - phase 3.

Resetting & placing in service

The procedure described should be carried out after any periodic operational test was simulated.

Note: downstream butterfly valve (**DBV**) is still closed.

FDV downstream drain valve is still open.

ITALIC - For real fire situation reset.
Regular – For fire situation simulation

1. Close the Upstream butterfly valve (**UBV**) or OS&Y valve.
2. *Close the trim pressure supply valve (**TS**).*
3. *Replace all wet pilot pipeline's blown-open automatic sprinkler/s.*
4. *Open the trim pressure supply valve.*
5. *Open inspector's valve, drain air bubbles.*
6. *(*For real and simulation fire situation) - *close the inspector's valve.*
7. Close the trim pressure supply valve (**TS**).
8. Clean the "Y" strainer's (**ST**) screen. Reassemble the strainer.
9. Open the trim pressure supply valve.
10. Press the PSA's (**PSA**) push-button. Release the push-button a few seconds after internal flow sound stops, to assure a complete filling of the FDV valve's control chamber.
11. Open the Upstream butterfly valve (**UBV**) or OS&Y valve.
12. Screw in the bottom plug the FDV downstream drain port.

The system is in SET state and placed in service.

MAINTENANCE

Prior to any stoppage of the fire protection system, a fire patrol should be placed in the area covered by the interrupted system.

Prior to generating any test procedures, turning on false alarms or turning off the alarm system, the local safety personnel and the close central fire station must be notified.

Daily Inspection

Make sure that the deluge valve's heating system (If equipped), functions correctly and that the Fire protection valve surrounding temperature is 4°C min.

Monthly Inspection

1. Observe the FDV valve for external damage: observe the piping and hose connections for leakage or damage.
2. Verify that the upstream butterfly valve (**UBV**) and the Trim pressure supply valve (**TS**) are in fully open position.
   Downstream drain valve and upstream drain valve (if equipped) need to be fully close.
3. Push the MADV if equipped or any manual drain valve and make sure that after emptying condensing water, the drain flow/dripping stops. If a constant leakage is observed, it might indicate a deluge valve sealing problem.

RAPHAEL FP

Annual test procedure

1. Conduct the monthly inspection procedure.

2. Perform the procedure described in chapter - **Commissioning the system - phase 2. -** Fire Situation Simulation. Check and confirm the system's proper operation.

3. Follow the procedure described in chapter - **Commissioning the system - phase 3**. - Resetting & placing in service. Check and confirm the system's proper operation.

Every 5 years inspection procedure

This major inspection and maintenance procedure includes the removal of the trim, the dismantling of the FDV's valve cover and performance of a comprehensive internal part examination. Then, the relevant trim accessories should be replaced, after completion, the Annual maintenance procedure is to be conducted.

1. Close the upstream butterfly valve (**UBV**) or OS&Y valve and the trim pressure supply valve (**TS**).

2. Open both FDV bottom drain ports. Drain the FDV's control chamber using the emergence valve.

3. Turn off or disconnect all relevant electrical wiring.

4. Release all relevant tubes fitting nuts, cover central union pipe connection and remove the disassembled trim.

5. Remove all the FDV's cover bolts. The cover will hang on its studs (at vertical installation). Release both nuts and remove the cover carefully.

6. Observe the internals of the valve and cover for excessive scale residuals, foreign particles, damaged coating (rust, cracks, or pealing). Worn or damaged parts need to be replaced. Consult Raphael's local representative or the service department for any maintenance or part replacement issue.

7. Replace the Diaphragm supplied with the system's maintenance kit. The identification tongue needs to point to the valve's stamped flow direction arrow side.

8. Reinstall the valve's cover: use Anti-seize paste to lubricate bolts and nuts and tight them in accordance with "Bolt's torque moments table".

9. The PSA rubber ball valve and all seal rings must be replaced.

10. DCPV pilot must be replaced.

11. Reinstall the trim carefully: avoid causing twists or dents on bent tubes and do not overtight the compression fitting's nuts.

12. When the system is fully reassembled, perform the chapters listed:

    - "**Commissioning the system - phase 1** - Filling and pressurizing the system"
    - **"Commissioning the system - phase 2. -** Fire Situation Simulation"
    - **"Commissioning the system - phase 3.** - Resetting & placing in service"

Bolt's Torque Moments Table

Bolt's Torque Moments Table

Valve size	1.5"	2"	2.5"	3"	4"	6"	8"	10"
Torque lb/ft	22	29	36	54	65	72	87	118

Equivalent pipe length for FDV deluge valves

Valve size		1.5"	2"	2.5"	3"	4"	6"	8"	10"
Equivalent length value	ft	11	24	25	28	31	46	72	117
	m	3.6	7.3	7.6	8.5	9.4	14	21.9	35.6

RAPHAEL FP

MARKING

The FDV valves are marked by a laser engraved, black anodized, 0.8mm (0.031”) thick metal plate, riveted to the valve’s cover.

The marking plate contains the data about (top to bottom):

- *Company name and trademark.*
- *Short description (Italic letters)*
- *Application’s type*: FDV-AA0 - Electric actuated Local Reset with Anti colomning
- (P/N) *The Application’s part number*: System properties–Valve properties
- *Rated pressure*: 250 psi
- *Equivalent Length: reference table - page 13.*
- *Serial Number*: Work order number-MM-YY-Number in batch 01-99
- *The UL listing mark & QR code:* EXxxxxx
- *The FM approved mark*
- *The Application’s* diameter in inch: XX”

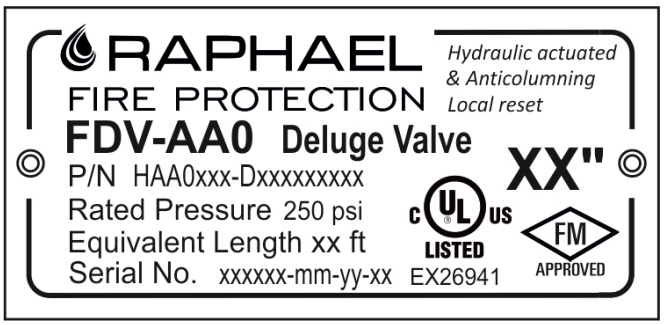

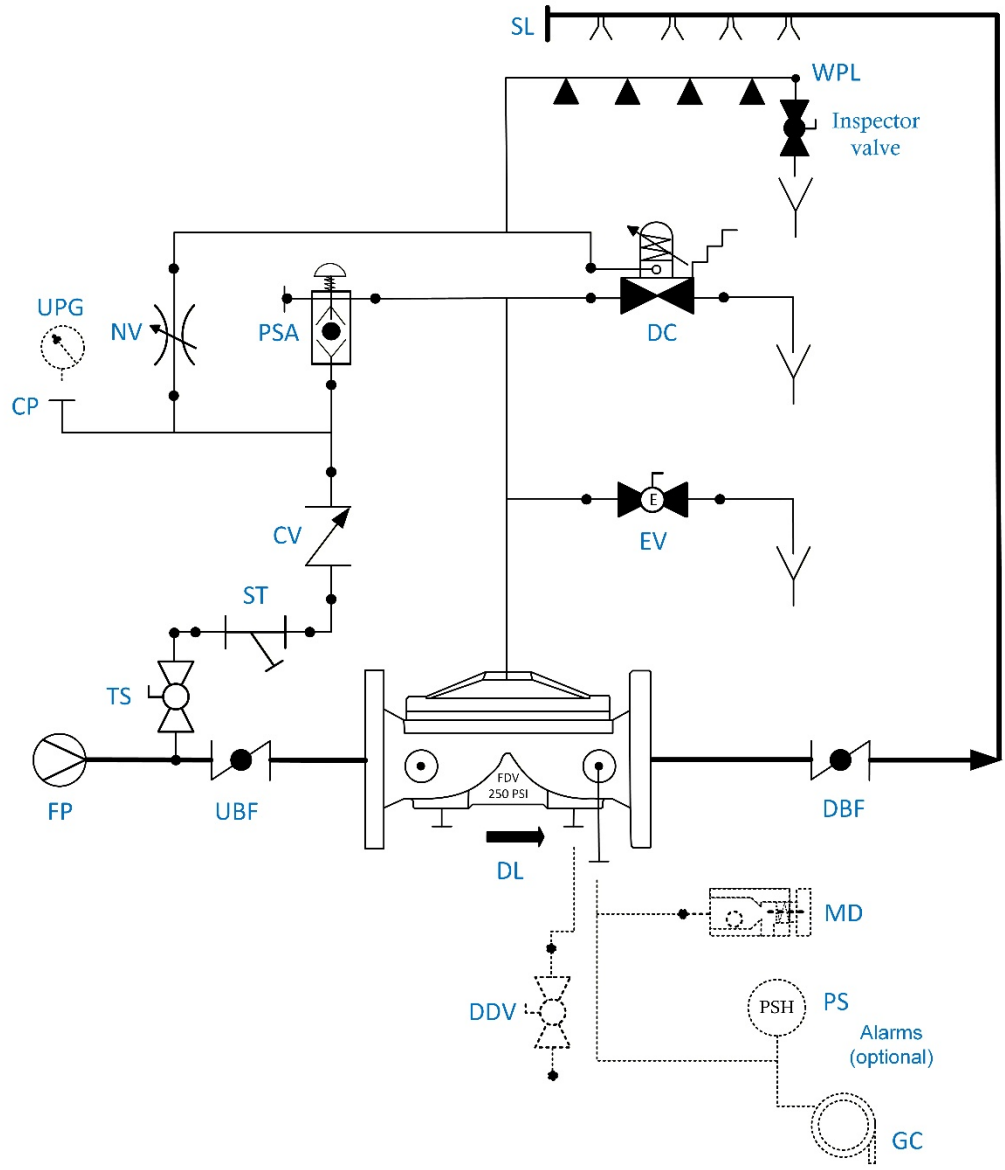

TS -	Trim supply	DL -	Deluge Valve		Water lines
ST -	Strainer	SL -	Sprinkles Line		Optional
AT -	Alarm Test valve	PC -	Pressure Gauge Connection		
DC	DCPV – Drain Control Pilot Valve	NV -	Needle valve		
CV -	Check Valve				
UBF -	Upstream Butterfly Valve	Optional			
DBV -	Downstream Butterfly Valve	DDV -	Downstream Drain Valve		
PSA -	Pressure Supply Arrestor	PS -	Pressure Switch		
EU -	Manual Emergency Valve	MD -	MADV – Man. / Auto. Drain Valve		
WPL	Wet Pilot Line	UPG -	Upstream pressure gauge		
FP -	Fire Pump	GC -	Gong connection		

RAPHAEL, founded in 1949, is the first Israeli manufacturer of water control valves. RAPHAEL´s research department constantly strives to introduce new and innovative products and solutions for water control systems including water works, fire-protection and irrigation systems.



RAPHAEL

RAPHAEL Valves Industries (1975) Ltd.

North Industrial Zone Or Akiva, 3063927 P.O.Box 555, Israel

Tel. +972 4 6263555 | info@raphael-valves.com | raphael-valves.com

Nov-25