Hydraulically & Anti-Columning Actuated, Remote Reset Deluge Valve FDV-AA0

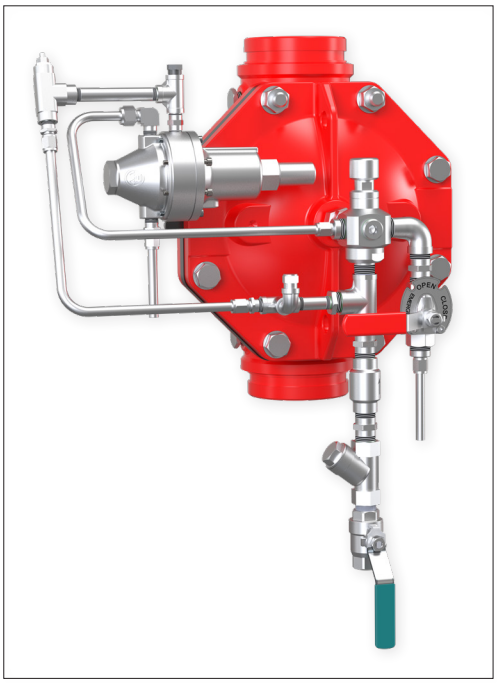

The FDV is a fire protection control valve for deluge fire sprinkler systems, designed for installation in hazardous environments.

It is suitable for both vertical and horizontal installations and features a globe-pattern, line-pressure-operated design with a direct elastomeric diaphragm seal. The valve contains no balancing spring or internal metallic components in the wetted area. Its hydrodynamic flow path ensures high flow rates with minimal head loss.

The FDV-AA0 deluge system is actuated hydraulically and reset locally.

When a hydraulic detection system - a Wet Pilot Detection Line - is exposed to a predetermined temperature, the automatic fire sprinklers shatter open, causing a pressure drop that activates a pilot valve, which in turn commands the FDV-AA0 deluge valve to open. The Anti-Columning feature ensures reliable system operation regardless of the detection line's height or its distance from the control valve. The deluge system also incorporates an emergency valve that bypasses the fire detection system for manual operation.

In addition, the FDV-AA0 system is equipped with a PSA device that manually and locally pressurizes the deluge control chamber and the wet pilot line. This keeps the valve closed, prevents re-pressurization during actuation (when the control chamber must be drained), and compensates for minor leakage-related pressure losses.

This configuration is suitable for open-nozzle water spray pipelines.

MARKETS

Commercial | Industry | Marine

Storage | Residential | Airport

TECHNICAL DATA

FLUID:
Water, Brackish water, Sea water, Foam

SIZE RANGE:
40mm to 250mm (1½'' to 10")

AVAILABLE CONNECTIONS ENDS:
Flange*Flange, Groove*Groove, Flange*Groove, Groove*Flange, Thread*Thread

PRESSURE NOMINAL:
250 psi (17.2 bar)

APPROVALS

FM APPROVED

ADVANTAGES

- Only three parts: body, diaphragm & cover plate, no wet metal spring inside the control chamber.
- Full bore unobstructed.
- Simple manual reset of the valve to standby position without draining or opening the valve itself, neither closing OS&Y or other valves in the system
- Full Anti Columning property enables a nearly unlimited pilot line height.
- Open fail safe valve, maintained in stand-by closed position by the PSA.
- Low maintenance cost: the valve is serviced in-line and only one replaceable part - the long-life elastomeric diaphragm.
- Conforms with inspection, Testing and Maintenance Standard of water-based Fire Protection Systems, NFPA 25

CHARACTERISTICS

- Hydrodynamic pattern design ensures high flow rates with minimum head loss.
- The valve trips open automatically upon a gradual release of water pressure from its control chamber. The trip is actuated by the hydraulic pressure release of the Wet Pilot Line, caused by its exposure to flame heat.
- The anti-columning properties guarantee an immediate system trip, regardless of the Wet Pilot height.
- Soft closing, upon pressurization of the valve's control chamber- by line pressure or another independent water source—prevents surges

The FDV-AA0 resets to the stand-by closed position by pressurizing the Dry Pilot Line and manually operating the PSA device.

Schematic drawing: FDV-AA0

Set position

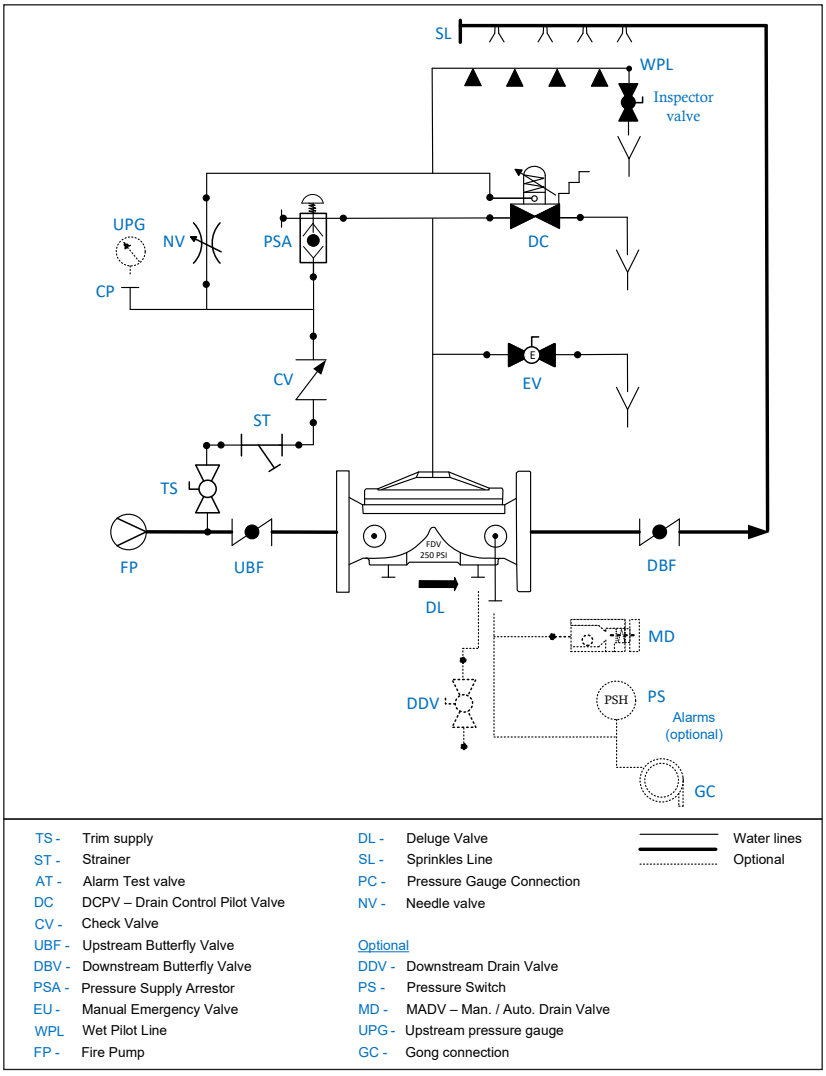

TS -	Trim supply	DL -	Deluge Valve		Water lines
ST -	Strainer	SL -	Sprinkles Line		Optional
AT -	Alarm Test valve	PC -	Pressure Gauge Connection		
DC	DCPV – Drain Control Pilot Valve	NV -	Needle valve		
CV -	Check Valve				
UBF -	Upstream Butterfly Valve	Optional			
DBV -	Downstream Butterfly Valve	DDV -	Downstream Drain Valve		
PSA -	Pressure Supply Arrestor	PS -	Pressure Switch		
EU -	Manual Emergency Valve	MD -	MADV – Man. / Auto. Drain Valve		
WPL	Wet Pilot Line	UPG -	Upstream pressure gauge		
FP -	Fire Pump	GC -	Gong connection		

OPERATION

SET position

Pressurized water in the valve's control chamber (DL) is trapped by the closed PSA (PSA), the closed emergency valve (EM) and by the closed DCPV drain pilot valve (DC). The hydraulic pressure accumulated in the Wet pilot line keeps this device in its close position, maintaining the FDV deluge valve closed.

FIRE situation

When some of the Wet pilot detection line's automatic fire sprinklers are subjected to the predetermined temperature levels and shutter-open, the pilot line pressure drops and the DCPV (DC) opens its drain port regardless of the residual column pressure.

Opening its drain port, the DCPV releases the FDV control chamber pressure causing it to open and admit water into the spray sprinklers pipeline.

RESET position

System reset requires the replacement of all Shattered-open Fire sprinklers in the Detection pilot line (WP). The wet pilot line is then pressurized to reset the DCPV to closed position. The PSA (PSA) push button should be pressed to enable upstream pressure passage to close the FDV's main valve.

Raphael reserves the right to change the contents without notice

FDV-AA0

Typical installation

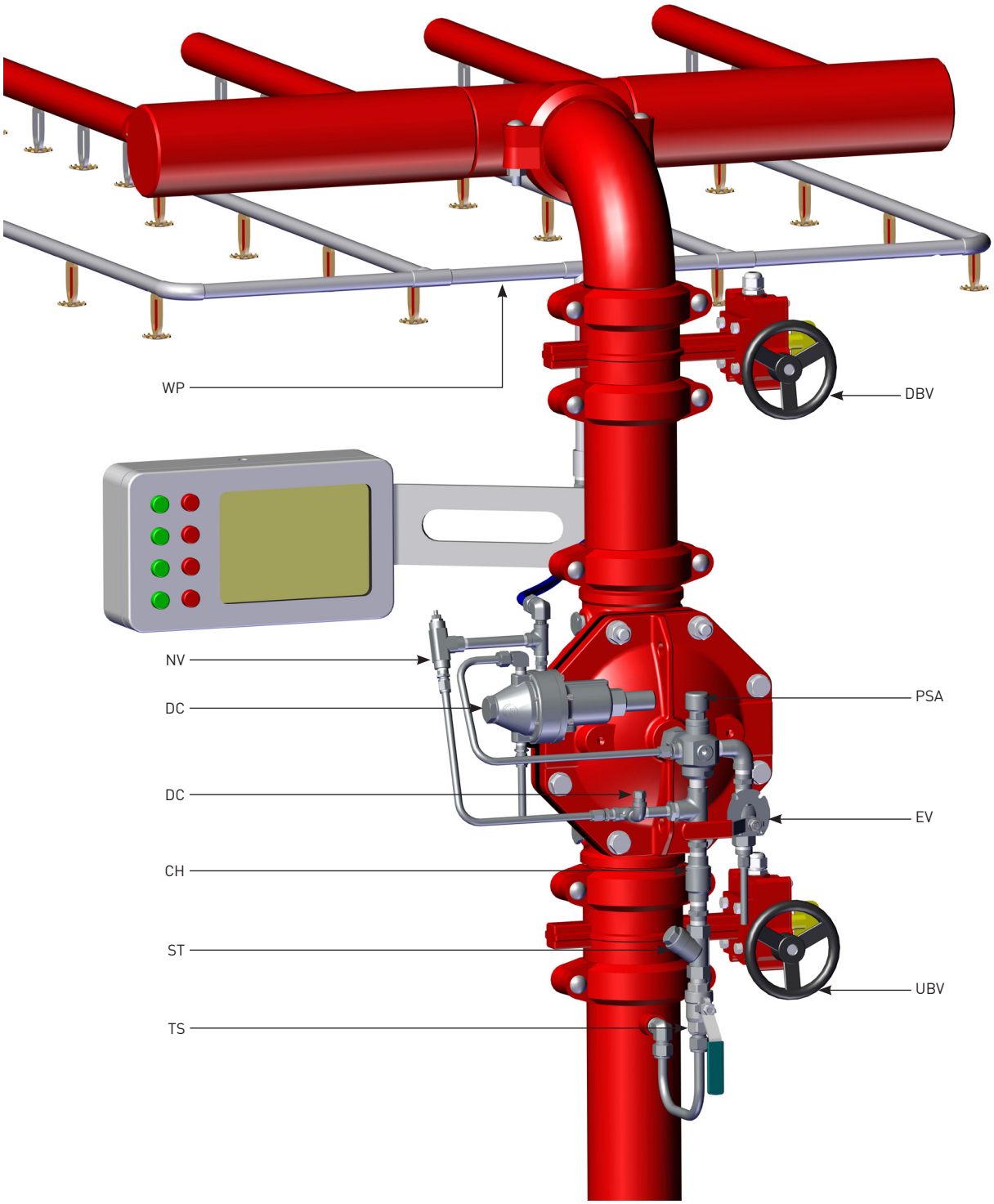

UBF - Upstream Butterfly valve
DBF - Downstream Butterfly valve
PC - Pressure Gauge Connection
WP - Wet Pilot line

TS - Trim supply valve
ST - "Y" strainer
CV - Check valve
NV - Needle Valve

PSA - Pressure Surge Arrestor
EV - Emergency Valve
DC - DCPV - Drain Control Pilot Valve

Parametric drawing:

FDV-AA0

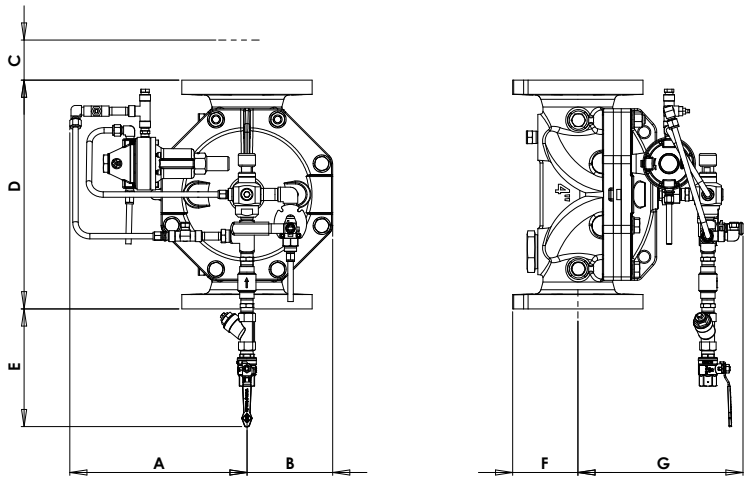

Dimensions Table

Size	1.5"		2"		3"		4"		6"		8"		10"	
	mm	inch	mm	inch	mm	inch	mm	inch	mm	inch	mm	inch	mm	inch
A	225	8.8	231	9	263	10.3	310	12.2	330	13	382	15	410	16.1
B	105	4.1	105	4.1	116	4.6	150	5.9	177	6.7	231	9	308	12.1
C	66	2.6	62	2.4	42	1.6	N/A	N/A	N/A	N/A	N/A	N/A	N/A	N/A
D	204	8.0	220	8.6	324	12.7	400	15.7	464	18.2	570	22.4	766	30.1
E	305	12	295	10.1	243	9.6	206	81	174	6.8	120	4.7	22	0.8
F	52	2	50	2	100	3.9	114	4.5	143	5.6	172	6.7	203	8
G	187	7.36	200	7.9	232	9	269	10.6	336	13.3	370	14.5	458	18
Kg/lb	10	22	12	26.4	29.5	65	45	99	55.6	122	101	222	230	507

Factory Standard

MAIN VALVE

BODY & COVER

- Ductile iron
- Cast Steel WCB
- Stainless Steel CF8
- Stainless Steel CF8M
- Nickel Aluminum Bronze

ELASTOMERS:

- NBR, 3-layered reinforced Natural Rubber
- EPDM, 3-layered reinforced

COATING:

- Base layer – high built Epoxy FBE
  Top layer – electrostatic Polyester powder RAL 3000
- Rilsan Polyamide based (Nylon 11)
- Internal – vitreous Enamel
  External – Epoxy/Polyester powder RAL 3000

TRIM

PIPING & TUBING:

- Stainless Steel 316
- Copper/Brass
- Cupro-Nickel
- Monel®

FITTINGS:

- Stainless Steel 316
- Brass
- Super Duplex
- Cupro-Nickel
- Monel®

ACCESSORIES:

- Brass
- Stainless steel 316/CF8M
- Nickel Aluminum Bronze
- Monel®
- Cupro-Nickel

PLEASE SPECIFY

- Working Media
- Ambiental conditions
- Min/Max operating flow
- Min/Max operating pressure
- System installation orientation
- Deluge valve ends and standard
- Deluge valve material and coating
- Trim materials
- Additional accessories needed:
  Pressure gauge
  Pressure switch
  Drain valve (manual or automatic)
  Gong

For more detailed technical information, please refer to chapter Engineering Data.

Raphael reserves the right to change the contents without notice