IOM FDV-3W-DH1

3 WAY HYDRAULICALLY ACTUATED, REMOTE RESET, DELUGE VALVE

Installation Operation & Maintenance manual

Fire Protection

RAPHAEL VALVES INDUSTRIES

RAPHAEL FP

IOM FDV-3W-DH1

3 Way HYDRAULICALLY Actuated, Remote Reset, Deluge Valve

DESCRIPTION

This deluge system is based on Raphael's FDV valve, equipped with a hydraulically actuated control trim. The valve and trim are available in a range of optional materials and coatings to suit various operational and environmental conditions, while the functional principle remains unchanged.
In the event of a fire, a hydraulic detection system (a wet pilot line with automatic sprinklers) activates the three-way hydraulic actuator. The actuator then releases the pressurized water contained in the FDV control chamber, causing the valve to open.
The valve can be fully accessorized and supplied with a wide range of optional components suitable for seawater, brackish water, and explosion-proof environments.
The system is designed for water-spray pipelines equipped with open nozzles.



RAPHAEL FP

PARTS LIST

3 Way HYDRAULICALLY Actuated, Remote Reset, Deluge Valve

1. Deluge valve
2. Orifice
3. Pressure Switch (optional)
4. Upstream pressure gauge
5. Alarm Test Valve (3 way)
6. “Y” Strainer
7. Trim supply valve
8. Control chamber pressure gauge
9. Needle valve
10. MEU (manual Emergence)
11. Upstream drain port (plugged)
12. Downstream drain valve
13. Water motor alarm connection
14. Check Valve
15. Upstream pressure gauge
16. MADV automatic drain valve

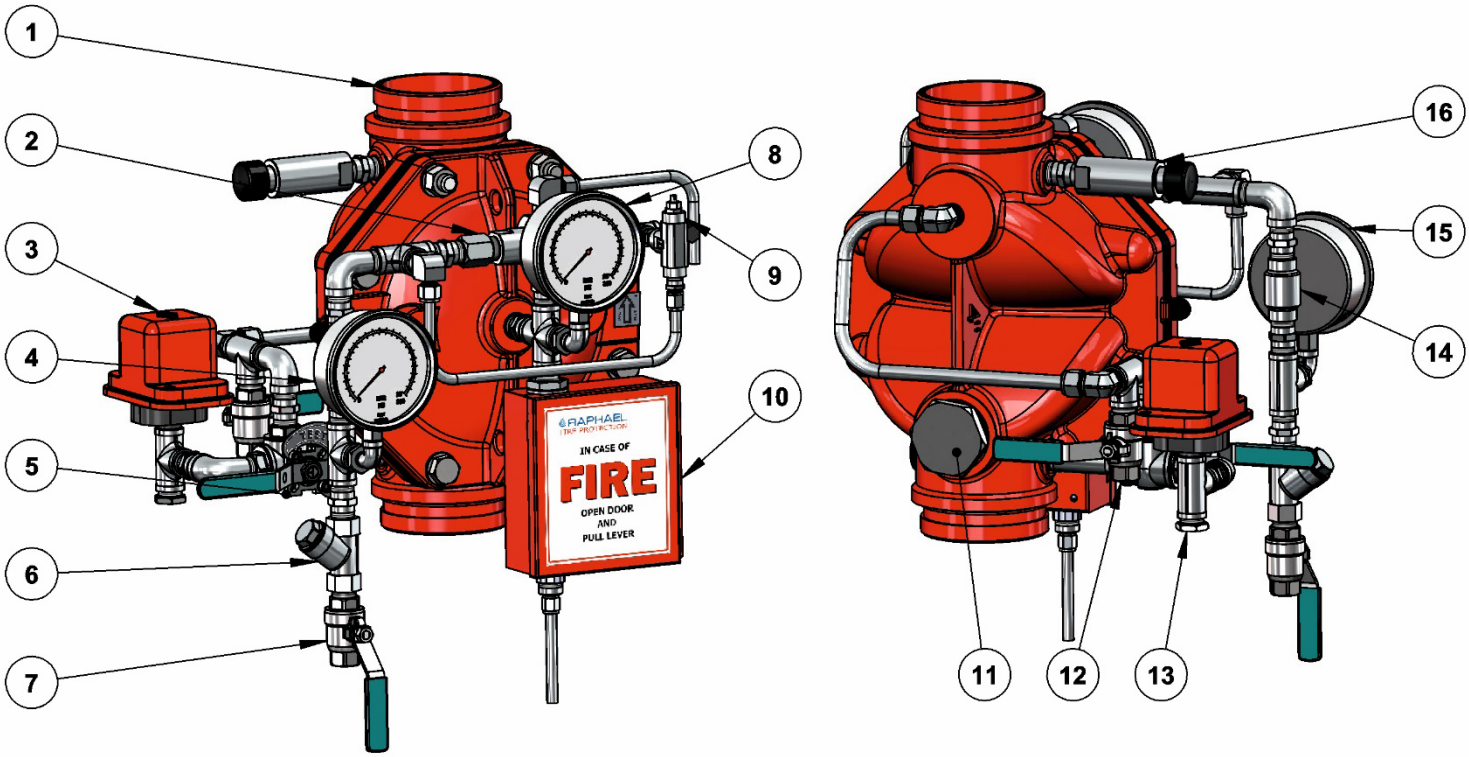

Figure 1

RAPHAEL FP

OPERATION (Reference Figure 1)

SET Position

Water is supplied through the trim supply valve (7), the “Y” strainer (6), and the check valve (14), into the HAV-3 actuator, where it fills the FDV control chamber.
Pressurized water in the control chamber is trapped by the check valve (14) and the closed MEU Emergency Valve Unit (10), keeping the deluge valve in the closed position.
Pressurized air in the dry pilot line—connected to the HAV-3 control chamber—maintains the actuator in its state where the inlet remains connected to the control chamber port.

Fire Situation

When one or more automatic sprinklers located along the wet pilot line are exposed to heat and open, the pilot line becomes depressurized.
This pressure drop causes the HAV-3 to shift to its OPEN state, allowing the FDV control chamber to drain.
As a result, the FDV valve opens and water flows into the sprinkler piping.
Opening the Emergency Valve Unit (10) bypasses all conditions, drains the FDV control chamber, and immediately opens the valve.

Reset Position

Resetting the system requires replacing all opened automatic sprinklers on the wet pilot line.
Once replaced, the wet pilot line and the HAV-3 control chamber can be repressurized.
As the HAV-3 returns to its CLOSED state, it re-pressurizes the FDV control chamber, causing the FDV valve to close and stopping water discharge from the nozzles.
At this stage, the system is returned to the SET position.

RAPHAEL FP

INSTALLATION (Reference Figure 2)

1. This system is supplied pre-assembled and factory pre-adjusted. Any change carried out at the system's trim components adjustments or order, pipe and tubes length or ports for axillary connection sizes, will affect the system operation and therefore prohibited.

2. The system cannot be installed at a location where it might be subjected to freezing temperatures.

3. To enable assembly/disassembly and maintenance work, sufficient room around the system location should be kept.

4. It should be considered that water will be drained during regular maintenance on a routine basis, during periodical tests procedures and when operating in fire situation. Therefore, a drainage plan should be considered.

5. Systems with identical operation but for horizontal installation are marked with a prefix "H", e.g. HFDV-3W-DH1.

6. At horizontal or vertical installation, the pipes connected to the FDV valve, need to be supported firmly to prevent the pipeline's weight from being loaded on the system's valve.

7. Any use of pipe/thread reduction-fittings installed at open ports designated for axillary components, (like Wet pilot pipeline connection, FDV valve's drains and Emergency drainpipe), is prohibited.

8. All connections to water supply, alarms etc. should be done in accordance with figure 2:
   (1) – Trim pressure supply connection
   (9) – Wet pilot pipe connection.

9. The FDV valve should be installed with the flow arrow marked on the valve's body, in the proper direction.

10. Before performing the high-pressure leak test, make sure that the butterfly valve or the OS&Y valve upstream of the deluge valve is closed, in order to prevent damage to the diaphragms in the valve and in the trim components.

11. Make sure that the gong connected to its designated outlet is supported so that its weight, along with the weight of the piping attached to it, is not applied to the valve trim.

INSTALLATION PARTS LIST (Reference Figure 2)

3 Way HYDRAULICALLY Actuated, Remote Reset, Deluge Valve

1. Trim supply valve (1/2” NPT female)
2. 3-Way alarms test valve
3. Water motor alarm * connection port (1/2” NPT. Plugged)
4. Pressure switch *
5. Downstream drain valve (1/2” NPT female)
6. “Y” Strainer
7. Check Valve
8. MADV manual automatic drain valve
9. Upstream pressure gauge
10. Wet pilot line
11. Downstream separation butterfly valve
12. Control chamber pressure gauge
13. Needle valve
14. 3-way Hydraulic actuator HAV-3
15. Orifice
16. MEU manual emergency unit
17. Upstream separation butterfly valve

RAPHAEL FP

IOM FDV-3W-DH1

3 Way HYDRAULICALLY Actuated, Remote Reset, Deluge Valve

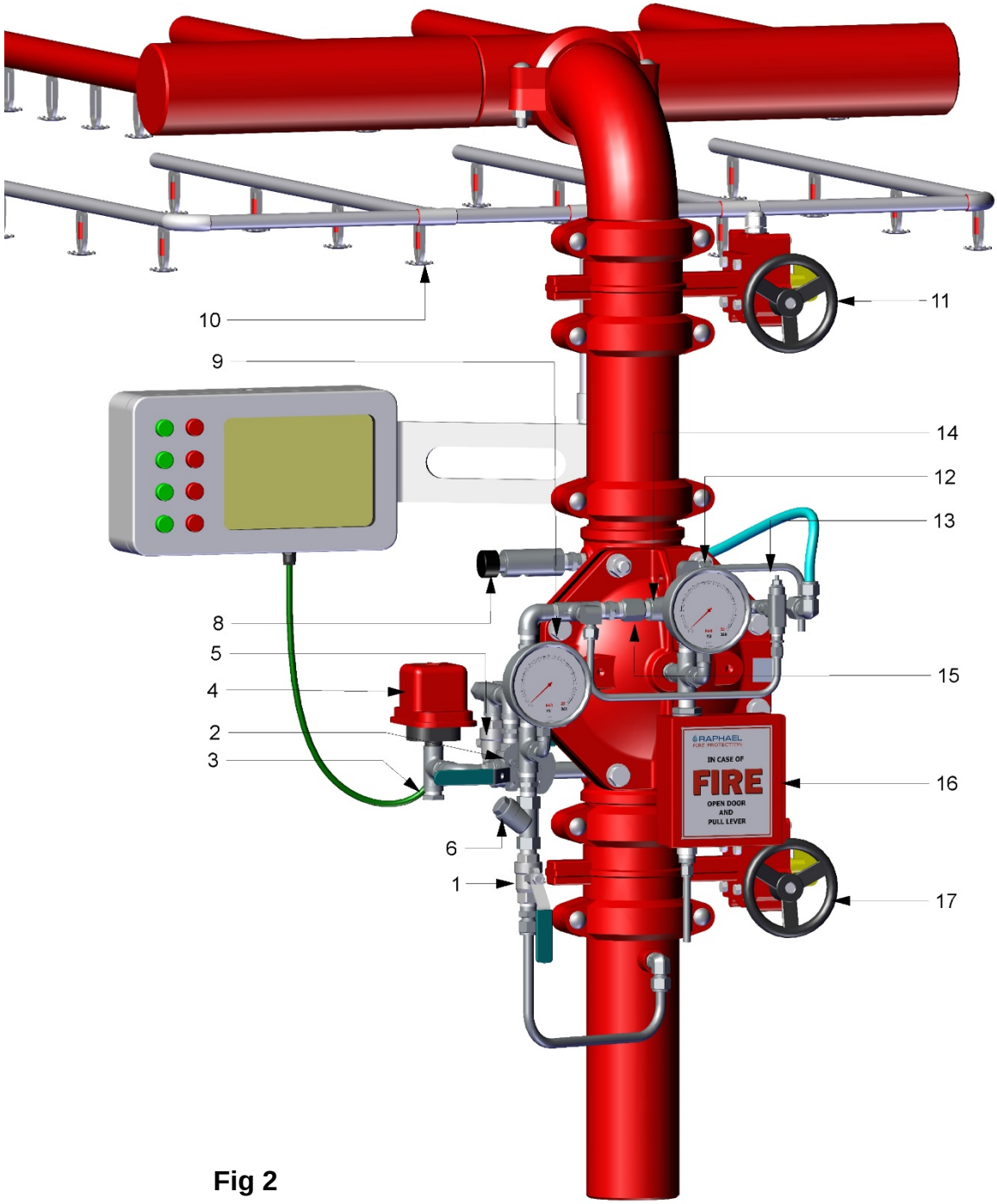

Fig 2

OPERATING INSTRUCTIONS (Reference Drawing - figure 2)

Commissioning the system - Phase 1

Filling and pressurizing the system.

The procedure described should be carried out after system installation completion and a comprehensive inspection.

(Reference Drawing - figure 2)

1. Make sure the upstream and downstream butterfly valves (**11** & **17**) are fully close. In addition, make sure that the upstream drain valve (if equipped) is closed.

2. Make sure the trim pressure supply ball valve (**1**) is Closed.

3. Make sure that the Emergency valve (**16**) is fully closed.

4. Open the inspector's valve located at the very end of the wet pilot's pipeline.

5. Fully open the needle valve (**13**). Then, open the trim pressure supply valve (**1**) and fill the trim, wet pilot and let water flow out of the inspector's valve until a clear flow, free of air bubbles is observed.

6. Close the inspector's valve and pressurize the trim, the FDV's control chamber, the wet pilot's line and the HAV-3's control chamber. Check the Wet pilot line's gauge (not illustrated) for proper pressure.

7. Gradually open the upstream butterfly valve (**17**) and make sure the downstream drain valve is not dripping. A dripping might indicate an FDV valve sealing issue. (see Troubleshooting chapter in FDV's basic valves datasheet & IOM bulletin)

The system is ready for the "**fire situation simulation"**.

Commissioning the system - phase 2.

Fire Situation Simulation

The procedure described should be carried out after the system was pressurized and a comprehensive leakage inspection was commissioned.
Energizing the solenoid can simulate a fire situation and cause the system to response by opening the FDV deluge valve.

NOTICE:

Prior to any stoppage of the fire protection system, a fire patrol should be placed in the area covered by the interrupted system.

Prior to generating any test procedures, turning on false alarms or turning off the alarm system, the local safety personnel and the close central fire station must be reported.

(Reference drawing - figure 2)

Untighten the counter nut and turn the needle valve stem fully open.

1. Make sure that the downstream butterfly valve (**11**) is close and that the FDV's downstream drain valve (**5**) is open.
2. Open the inspector valve at the wet pilot.
3. The deluge valve is supposed to open: Observe water flow through the open FDV's downstream drain valve.

a. If the deluge valve trips and opens, no additional adjustment is needed.

Perform the chapter **Commissioning the system - phase 3**.- Resetting & placing in service.

b. If the deluge valve does not trip and opens, perform the "Needle valve adjustment procedure".

Needle valve adjustment procedure

The Needle valve needs to be re-set during the first actuation as its state is influenced by the wet pilot pipeline height, length and the working pressure of the deluge system. The purpose of this adjustment is to ensure that the needle valve's rate of flow will be smaller than the rate of flow of the most remote sprinkler installed on the pilot pipeline ("overcompensation of the pilot line")

- If the Deluge system remains close (**b.**), the needle valve should be closed gradually until the deluge trips open.
- If ok, secure the needle valve stem by tightening the counter nut firmly.

Note:

- If the needle valve is turned too open, the deluge valve might not open.

- If the needle valve is turned too close, it will take a long time to fill and pressurize the wet pilot line at the time of the next fire simulation or real fire situation.
- After needle valve adjustment, perform the chapter Commissioning the system - phase 3.- Resetting & placing in service.

Commissioning the system - phase 3.

Resetting & placing in service

The procedure described should be carried out after any periodic operational test simulated or real fire situation.

1. *after Simulated fire situation:*
   - Close the upstream separation butterfly valve (**17**).
   - Close the Wet pilot line inspector's valve.
   - Follow steps 2-7.

   After a Real fire situation) :
   - Close the upstream separation butterfly valve.
   - Replace the blown-open automatic sprinklers on the Wet pilot line.
   - Follow steps 2-6.

2. Close the trim pressure supply valve (**1**).
3. Clean the trim strainer's screen (**6**). Re-assemble the strainer's screen.
4. Open the trim pressure supply valve.
5. Open the butterfly valve (**17**). The FDV valve should remain closed.
6. Let the pipeline drain through the downstream drain valve or push the MADV push button. At the drainage end, close this valve.
7. Open the downstream butterfly valve (**10**).

The system is in SET state and placed in service.

RAPHAEL FP

MAINTENANCE

Prior to any stoppage of the fire protection system, a fire patrol should be placed in the area covered by the interrupted system.
Prior to generating any test procedures, turning on false alarms or turning off the alarm system, the local safety personnel and the close central fire station must be notified.

The Maintenance and inspection procedures are based on the relevant chapters at the NFPA 25.

Daily Inspection

Make sure that the deluge valve's heating system (If equipped), functions correctly and that the Fire protection valve surrounding temperature is 4°C min.

Monthly Inspection

1. Observe the FDV deluge valve and its trim for external damage: observe the trim piping and hose connections for leakage or damage.

2. Verify that the upstream and downstream separation butterfly valves (**11** & **17**) and the Trim pressure supply valve (**1**) are in fully open position.

3. Open the downstream drain valve or push the MADV (**8**) push-button. Make sure there is no leakage or dripping. When done, close this ball valve or stop pushing the MADV push-button.

4. Move the 3-way ball valve handle to set to test. The alarm pressure switch should send a signal to the main control hub, and the acoustic alarm (WMA, if equipped) should sound.
   .

RAPHAEL FP

Annual test procedure

1. Conduct the monthly test & inspection procedure.
2. Perform the procedure described in chapter - **Commissioning the system - phase 2. -** Fire Situation Simulation. Check the system's proper operation.
3. Follow the procedure described in chapter - **Commissioning the system - phase 3.** - Resetting & placing in service, chapter **Resetting & placing in service.**

Every 5 years inspection procedure

This major inspection procedure includes the removal of the trim, the dismantling of the FDV's valve cover and performance of a comprehensive internal parts examination. Then, the relevant trim accessories should be maintained, referring to their maintenance instruction. After the completion, the Annual maintenance procedure is to be conducted.

1. Close both butterfly valves (**11 & 17**) and the trim pressure supply valves (**1**).
2. Open the drain valves (5) and the upstream drain valve if equipped. Drain the FDV's control chamber using the Emergency valve (**16)**.
3. Open the Wet pilot line inspector's valve and depressurize.
4. Turn off or disconnect all relevant electrical circuits (if exist).
5. Disconnect the Wet pilot line's connection. Release all relevant tubes fitting nuts and the central union pipe connection.
6. Remove the disassembled trim.
7. Remove all the FDV's cover bolts. The cover will hang on its studs. (vertical installation, from 4" and up). Release both nuts and remove the cover carefully.
8. Observe the internals of the valve and cover for excessive scale residuals, foreign particles, damaged coating (rust, cracks, or pealing).
   Worn or damaged parts should be replaced. Consult Raphael's local representative or the service department for any maintenance or part replacement issue.

9. Replace the Diaphragm with the one supplied with the system's maintenance kit. The identification tongue should point to the valve's stamped flow direction arrow side.

10. Reinstall the valve's cover: use the Anti-seize paste tube supplied at the maintenance kit and lubricate bolts and nuts threads. Tight bolts and nuts in accordance with "Bolt's torque moments table".

11. The trim accessories HAV-3 and MADV should be replaced in accordance with the NFPA-25, in "Standard for the inspection testing and maintenance of water-based fire protection systems".

12. Reinstall the trim carefully: avoid causing twists or dents on bent tubes and do not overtight the compression fitting's nuts.

13. When the system is fully reassembled, perform the "**Commissioning the system - phase 1** - Filling and pressurizing the system" procedure.

14. Perform the "**Annual test procedure**".

Bolt's Torque Moments Table

Valve size	1.5"	2"	2.5"	3"	4"	6"	8"	10"
Torque lb/ft	22	29	36	54	65	72	87	118

Equivalent pipe length for FDV deluge valves

Valve size	1.5"	2"	2.5"	3"	4"	6"	8"	10"
Equivalent length value ft (m)	11 (3.6)	24 (7.3)	25 (7.6)	28 (8.5)	31 (9.4)	46 (14)	72 (21.9)	117 (35.6)

RAPHAEL FP

MARKING

The FDV valves are marked by a laser engraved, black anodized, 0.8mm (0.031”) thick metal plate, riveted to the valve’s cover.

- *Company name and trademark.*
- *Short description (Italic letters)*
- *Application’s type*: FDV-3W-DH1 - 3-way Hydraulic actuated, Remote Reset.
- (P/N) *The Application’s part number*: System properties–Valve properties
- *Rated pressure*: 250 psi
- *Equivalent Length: reference table - page 12.*
- *Serial Number*: Work order number-MM-YY-Number in batch 01-99
- *The UL listing mark & QR code:* EXxxxxx
- *The Application’s* diameter in inch: XX”

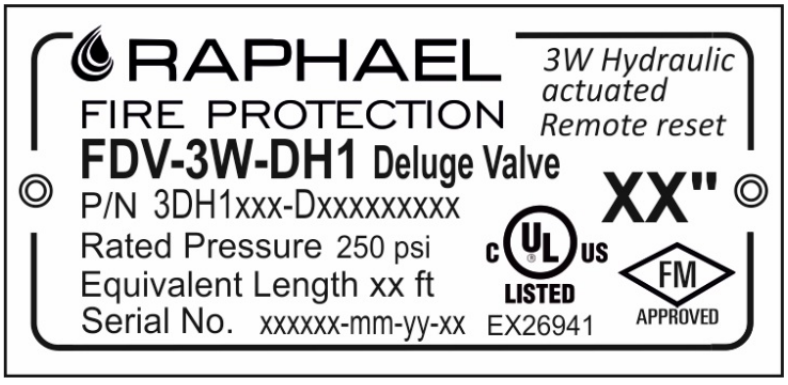

RAPHAEL FP

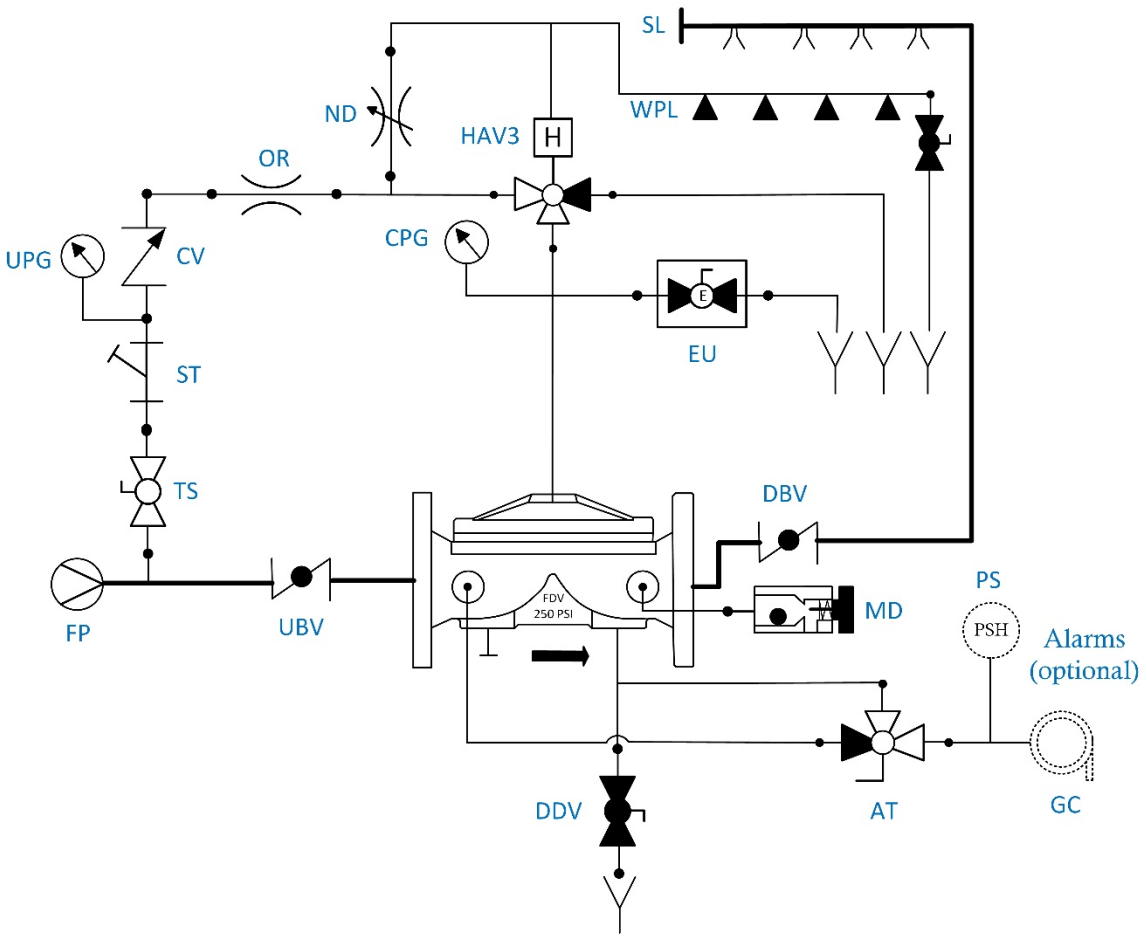

TS -	Trim supply	UBV -	Upstream Butterfly Valve		Water lines
ST -	Strainer	DBV -	Downstream Butterfly Valve		
AT -	Alarm Test valve	CPG -	Control Chamber P. gauge	– – – – – –	Electrical line
GC -	Gong connection	UPG -	Upstream Pressure gauge		
CV -	Check Valve	EU -	Manual Emergency Valve		
OR -	Orifice	SL -	Sprinkles Line		
PS -	Pressure Switch	DDV -	Downstream Drain Valve		
DL -	Deluge Valve	FP -	Fire Pump		
MD -	MADV – Manual / Automtic Drain Valve	SL -	Sprinklers Line		
NV -	Needle Valve	HAV3 -	Hydraulic actuator Valve 3-way		

RAPHAEL, founded in 1949, is the first Israeli manufacturer of water control valves. RAPHAEL´s research department constantly strives to introduce new and innovative products and solutions for water control systems including water works, fire-protection and irrigation systems.



RAPHAEL

RAPHAEL Valves Industries (1975) Ltd.

North Industrial Zone Or Akiva, 3063927 P.O.Box 555, Israel

Tel. +972 4 6263555 | info@raphael-valves.com | raphael-valves.com

Nov-25