3 Way Hydraulically Actuated, Remote Reset Deluge Valve

FDV- 3W-DH1

The FDV-3W-DH1 fire protection system is based on Raphael's FDV deluge valve and is equipped with a hydraulically actuated control trim. The FDV functions as a fire protection control valve for deluge sprinkler systems and is specifically designed for installation in hazardous environments. It is suitable for both vertical and horizontal installations and features a globe-pattern, line-pressure-operated design with a direct elastomeric diaphragm seal.



The valve contains no balancing spring and no metallic components in the wetted area. Its hydrodynamic flow path ensures high flow rates with minimal head loss.

The FDV-3W-DH1 deluge system is hydraulically actuated and can be reset remotely. When one or more automatic sprinklers in the wet pilot detection line are exposed to flame heat and shatter open, the pressure in the detection line decreases. This pressure drop also reduces the pressure in the three-way actuator's control chamber, causing the actuator to change its state. In this state, the actuator drains the deluge valve's control chamber, allowing the valve to open fully and admit water into the spray sprinkler system.

When the detection line is re-pressurized, the actuator returns to its initial state. This allows upstream pressure to flow into the deluge valve's control chamber, re-pressurizing it and closing the valve. Consequently, water flow to the spray sprinkler system stops.

The deluge system includes an emergency valve that bypasses the fire detection system for manual operation. It is suitable for use with automatic sprinklers on the dry pilot line and with open nozzles on the main spray pipelines.

MARKETS

Marine · Industry · Storage · P.O.G. · Airports

TECHNICAL DATA

FLUID:
Water, Brackish water, Sea water, Foam

SIZE RANGE:
40mm to 250mm (1½'' to 10")

AVAILABLE CONNECTIONS ENDS:
Flange*Flange, Groove*Groove, Flange*Groove, Groove*Flange, Thread*Thread

PRESSURE NOMINAL:
250 psi (17.2 bar)

APPROVALS

ADVANTAGES

- Ony three parts: body, diaphragm & cover plate. No wet metal spring inside the control chamber.
- Unobstructed full bore valve.
- Simple manual reset of the valve to standby position without closing OS & Y or other valves in the system.
- Open fail safe valve, maintained in standby closed position.
- Low maintenance cost: the valve is serviced in-line with only one replaceable part which is long life elastomeric diaphragm.
- Conforms with inspection, testing and maintenance standards of water based fire protection systems, NFPA 25.

CHARACTERISTICS

- Hydrodynamic pattern design ensures high flow rates with minimal head loss.
- The valve automatically trips open when water pressure in its control chamber is gradually released. The trip is actuated by a pressure drop in the pilot line caused by flame heat that triggers one or more automatic sprinklers to open.
- Soft closing upon re-pressurization of the valve's control chamber—by line pressure or another independent water source—prevents surges.

The FDV-3W-DH1 three-way control principle ensures full valve opening with maximum flow rate and minimal head loss.

This system resets to stand-by close position by shutter open sprinkler replacement, and re-pressurizing the pilot line.

Schematic drawing: FDV-3W-DH1

Set position

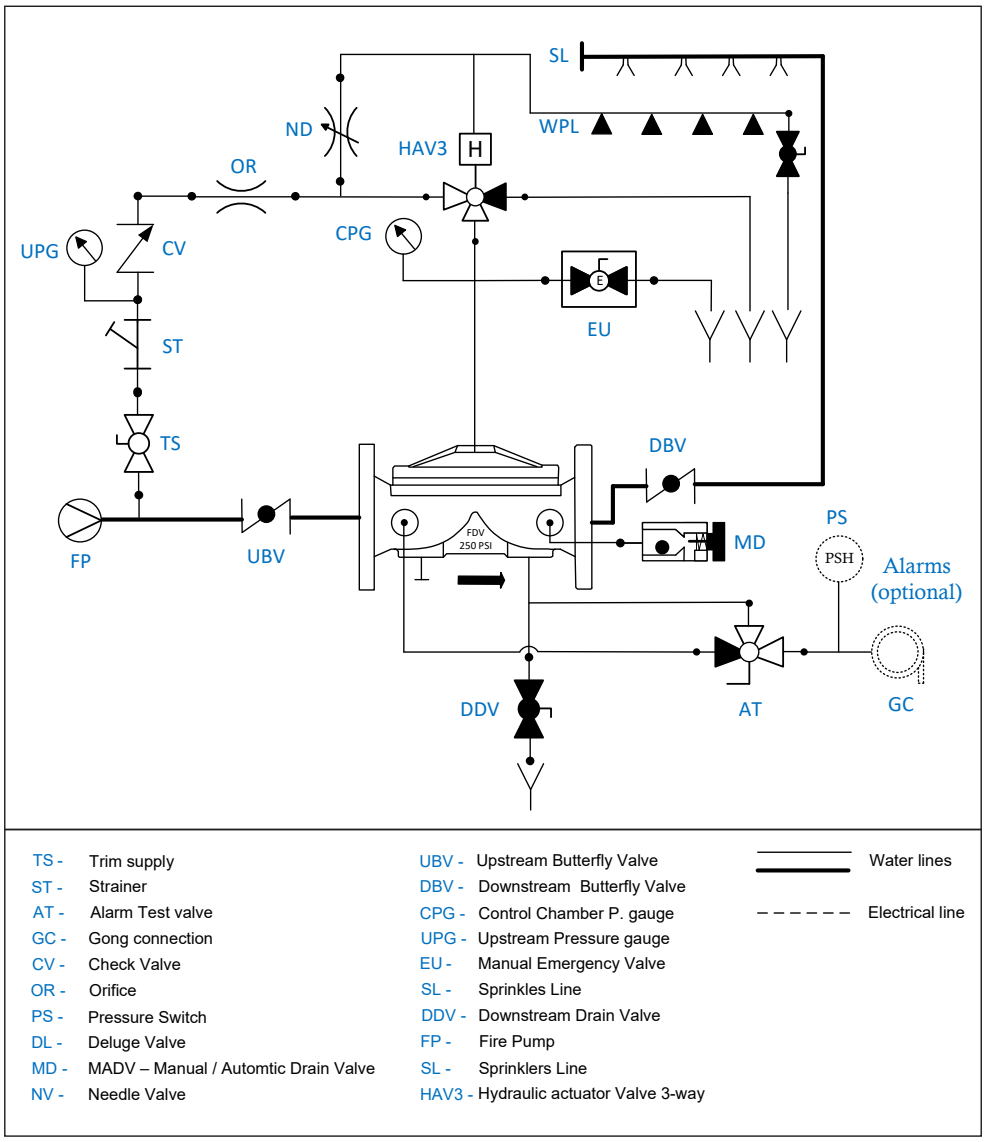

TS -	Trim supply	UBV -	Upstream Butterfly Valve		Water lines
ST -	Strainer	DBV -	Downstream Butterfly Valve		
AT -	Alarm Test valve	CPG -	Control Chamber P. gauge	- - - - - -	Electrical line
GC -	Gong connection	UPG -	Upstream Pressure gauge		
CV -	Check Valve	EU -	Manual Emergency Valve		
OR -	Orifice	SL -	Sprinkles Line		
PS -	Pressure Switch	DDV -	Downstream Drain Valve		
DL -	Deluge Valve	FP -	Fire Pump		
MD -	MADV – Manual / Automtic Drain Valve	SL -	Sprinklers Line		
NV -	Needle Valve	HAV3 -	Hydraulic actuator Valve 3-way		

OPERATION

SET position

Pressurized water in the valve's control chamber is trapped by the check valve (CV) and the closed emergency valve (EU), keeping the FDV deluge valve closed. The hydraulic actuator's (HAV3) control chamber is pressurized by the Wet Pilot Line (WPL). This pressure holds the actuator in an open position, allowing upstream flow into the deluge valve's control chamber and thereby maintaining the valve in its closed state.

FIRE situation

When one or more automatic sprinklers in the Wet Pilot Detection Line (WPL) are exposed to fire heat and shatter open, the line pressure drops. Consequently, the pressure in the three-way actuator's (HAV3) control chamber also decreases, causing the actuator to change state. In this new state, the actuator drains the deluge valve's control chamber, which opens the deluge valve and allows water to flow into the sprinkler system.

RESET position

When one or more automatic sprinklers in the Wet Pilot Detection Line (WPL) are exposed to fire heat and shatter open, the line pressure drops. Consequently, the pressure in the three-way actuator's (HAV3) control chamber also decreases, causing the actuator to change state. In this new state, the actuator drains the deluge valve's control chamber, which opens the deluge valve and allows water to flow into the sprinkler system.

Raphael reserves the right to change the contents without notice

FDV- 3W-DH1

Typical installation

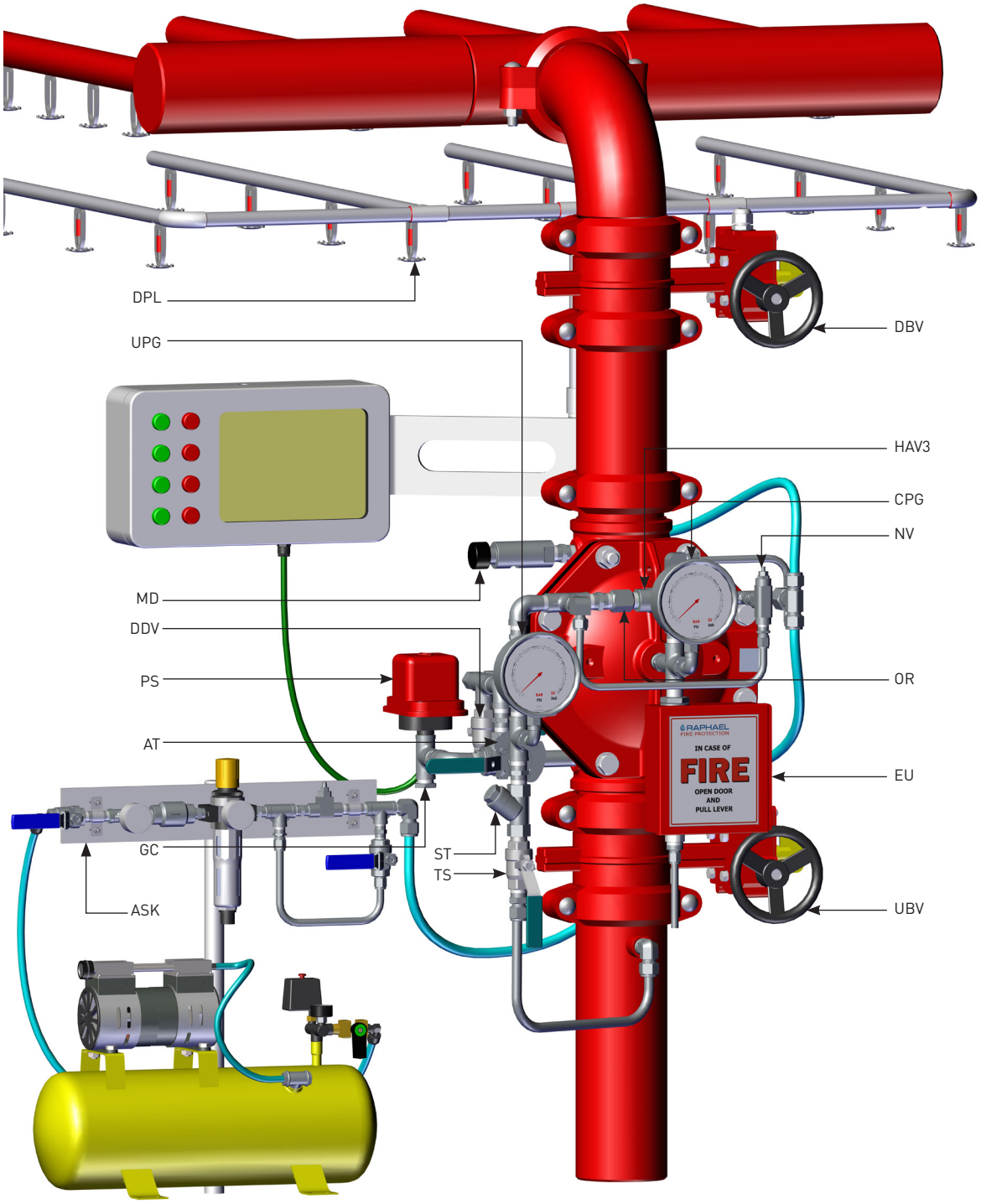

PS - Pressure Switch
HA - HAV-3 Hydraulic actuator 3 way
EU - Emergency Unit
UBV - Upstream Butterfly Valve
DBV - Downstream Butterfly Valve
UPG - Upstream Pressure Gauge

CPG - Control Camber Pressure Gauge
GC - Gong connection
DPL - Wet Pilot Line
MD - Manual Automatic Drain Valve
CV - Check Valve
NV - Needle valve

OR - Orifice
DDV - Downstream Drain Valve
AT - Alarms Test Valve
ST - "Y" Strainer
TS - Trim Supply

Parametric drawing:

FDV-3W-DH1

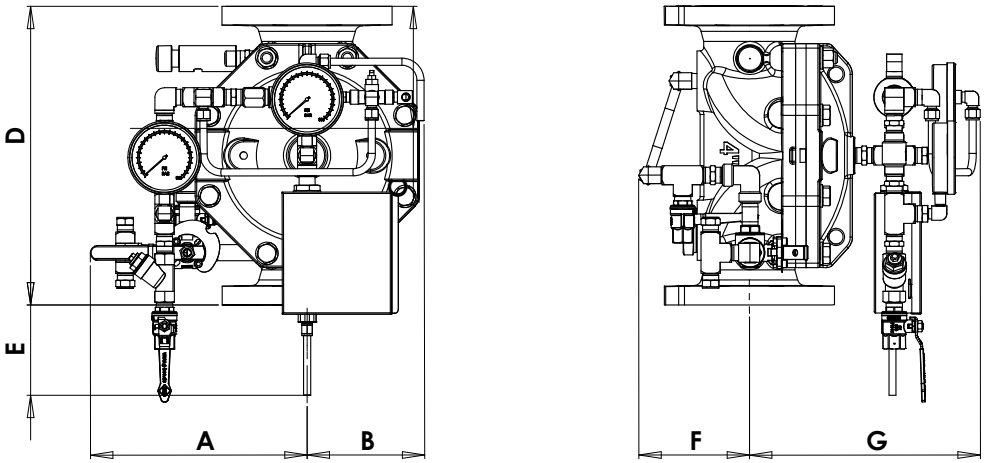

Dimensions Table

Size	1.5"		2"		3"		4"		6"		8"		10"	
	mm	inch	mm	inch	mm	inch	mm	inch	mm	inch	mm	inch	mm	inch
A	267	10.3	268	10.5	276	10.8	290	11.4	316	12.4	340	13.4	373	14.7
B	156	6.1	156	6.1	156	6.1	156	6.1	177	7	232	9.1	308	12.1
C	135	5.3	135	5.3	74	2.9	36	1.4	N/A	N/A	N/A	N/A	N/A	N/A
D	202	8.0	325	8.6	324	12.7	400	15.7	464	18.2	570	22.4	766	30.1
E	220	8.66	224	8.8	158	6.2	121	4.7	89	3.4	36	1.4	N/A	N/A
F	127	5	127	5	128	5	150	5.9	151	5.9	171	6.7	203	8
G	230	10.6	230	10.6	274	10.8	310	12.2	376	14.8	415	16.2	500	19.6
Kg/lb	10.3	22.7	12.0	26.4	29.2	64.3	45.2	99.6	55.5	123	121	266	230	507

Factory Standard

MAIN VALVE

BODY & COVER

- Ductile iron
- Cast Steel WCB
- Stainless Steel CF8
- Stainless Steel CF8M
- Nickel Aluminum Bronze

ELASTOMERS:

- NR, fabric reinforced Natural Rubber
- EPDM, fabric reinforced
- NBR, fabric reinforced Nitrile Rubber

COATING:

- Base layer – high built Epoxy FBE
  Top layer – electrostatic Polyester powder RAL 3000
- Rilsan Polyamide based (Nylon 11)
- Internal – vitreous Enamel
  External – Epoxy/Polyester powder RAL 3000

TRIM

PIPING & TUBING:

- Stainless Steel 316
- Copper/Brass
- Cupro-Nickel
- Monel®

FITTINGS:

- Stainless Steel 316
- Brass
- Super Duplex
- Cupro-Nickel
- Monel®

ACCESSORIES:

- Stainless steel CF8M / 316
- Brass
- Nickel Aluminum Bronze
- SMO-245
- Monel®

PLEASE SPECIFY

- Working Media
- Ambiental conditions
- Min/Max operating flow
- Min/Max operating pressure
- System working pressure
- System installation orientation
- Deluge valve ends and standard
- Deluge valve material and coating
- Trim materials
- Pilot line installation height
- Additional accessories needed

For more detailed technical information, please refer to chapter Engineering Data.

Raphael reserves the right to change the contents without notice