IOM FDV-3W-AH1

3 WAY HYDRAULICALLY ACTUATED, REMOTE RESET, ECONOMIC DELUGE VALVE

Installation Operation & Maintenance manual

Fire Protection

RAPHAEL VALVES INDUSTRIES

RAPHAEL FP

IOM FDV-3W-AH1

3 Way Hydraulically Actuated, Remote Reset, Economic Deluge Valve

DESCRIPTION

This deluge system is based on Raphael's FDV valve, equipped with a hydraulically actuated control trim. The valve and its trim are available in a variety of materials and coatings to suit different operational and environmental conditions; however, the system's functional principle remains the same.

In the event of a fire, a hydraulic detection system - consisting of a wet pilot line with automatic sprinklers - activates the three-way hydraulic actuator. This actuator then releases the pressurized water trapped in the FDV's control chamber, causing the valve to open.

The system is designed for water-spray pipelines with open nozzles.

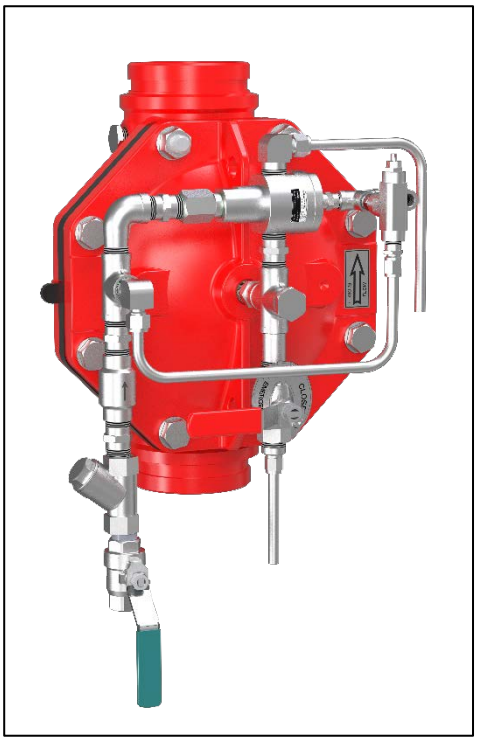

RAPHAEL FP

PARTS LIST

3 Way Hydraulically Actuated, Remote Reset, Economic Deluge Valve

1. FDV Deluge Valve
2. Control chamber Pressure gauge port (1/2” NPT female, plugged)
3. Orifice
4. Check Valve
5. “Y” Strainer
6. Trim supply valve (1/2” NPT female)
7. Needle valve
8. Wet pilot connection
9. HAV-3 3-way actuator
10. Emergency valve
11. Downstream side port (1/2” NPT plugged)
12. Downstream drain port (1/2” NPT plugged)
13. Upstream drain port (plugged)
14. Upstream side port (1/2” NPT plugged)

Fig. 1

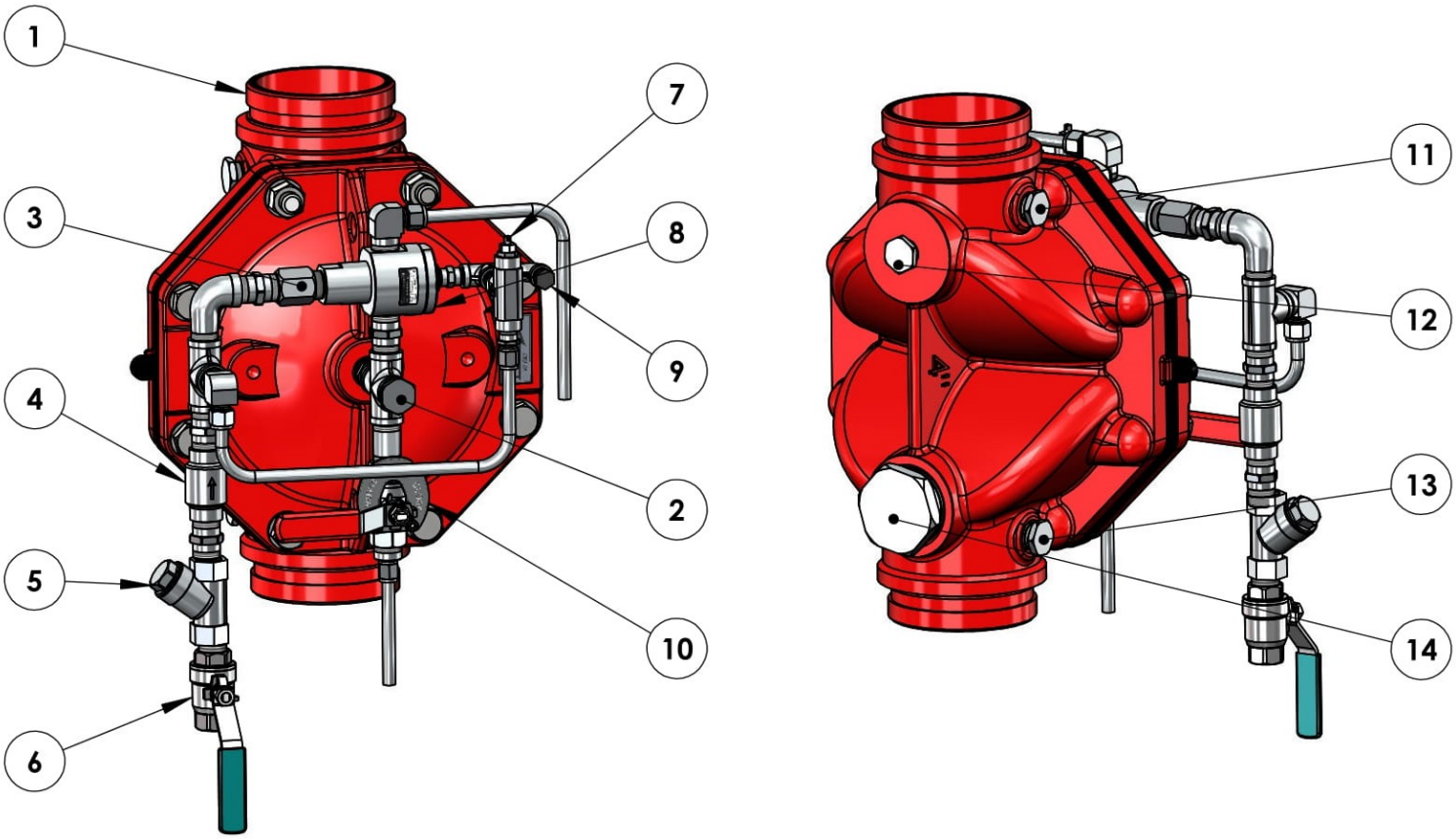

OPERATION (Reference Figure 1)

SET position:

Water is supplied by the trim supply valve (**6**), through the "Y" strainer (**5**), check valve (**4**) through the HAV-3 actuator (**9**), and fills the FDV's control chamber. Pressurized water in the valve's control chamber gets trapped by the check-valve (**4**), and by the closed emergency valve (**10**), maintaining the deluge valve in closed position.
The pressurized water in the Wet pilot line (connected to HAV-3's control chamber - **8**), holds it in its state where its inlet is connected to the deluge control chamber port.

FIRE situation

When one or more of the automatic sprinklers located along the Wet pilot line gets subjected to flames heat and blows-open, it depressurizes the pilot line. This pressure drop causes HAV-3 (**9**) to shift to its OPEN state and drains the FDV deluge valve's control chamber. The opened FDV valve admits water into the sprinklers pipeline/s.

Opening the Emergency valve (**10**) bypasses all conditions, drain the FDV valve's control chamber and open the valve immediately.

RESET position

Resetting this system requires the replacement of all Wet Pilot line's blown-open automatic sprinklers. This replacement enables pressurizing the Wet pilot line and the HAV-3 (**9**) control chamber.

As the HAV-3 moves to its CLOSE state, it pressurizes the FDV's control chamber. Consequently, the FDV valve closes, and the open nozzles spray stops.
By that, the system moved into the SET position.

RAPHAEL FP

INSTALLATION (Reference Figure 2)

1. This system is supplied pre-assembled and factory pre-adjusted. Any change carried out at the system's trim components adjustments or order, pipe and tubes length or ports for axillary connection sizes, will affect the system operation and therefore prohibited.

2. The system cannot be installed at a location where it might be subjected to freezing temperatures.

3. To enable assembly/disassembly and maintenance work, sufficient room around the system location should be kept.

4. It should be considered that water will be drained during regular maintenance on a routine basis, during periodical tests procedures and when operating in a fire situation. Therefore, a drainage plan should be considered.

5. Systems with identical operation but for horizontal installation are marked with a prefix "H", e.g. HFDV-3W-AH1.

6. At the installation, the pipes connected to the FDV valve need to be supported firmly to prevent the pipeline's weight loaded on the system's valve.

7. Any use of pipe/thread reduction-fittings installed at open ports designated for axillary components, (like Wet pilot pipeline connection, FDV valve's drains and Emergency drainpipe), is prohibited.

8. All connections to water supply, alarms etc. should be done in accordance with figure 2:
   (1) – Trim pressure supply connection
   (9) – Wet pilot pipe connection.

9. The FDV valve should be installed with the flow arrow marked on the valve's body, in the proper direction.

RAPHAEL FP

INSTALLATION PARTS LIST (Reference Figure 2)

3 Way Hydraulically Actuated, Remote Reset, Economic Deluge Valve

1. Trim supply valve (1/2” NPT female)
2. “Y” Strainer
3. Check Valve
4. Control chamber pressure gauge (plugged, ½” NPT female)
5. Orifice
6. Wet pilot line with automatic close sprinklers
7. Downstream separation butterfly valve
8. HAV-3, 3-way actuator
9. Wet pilot connection port (1/4” NPT female)
10. Needle valve
11. Manual Emergence valve
12. Upstream separation butterfly valve.

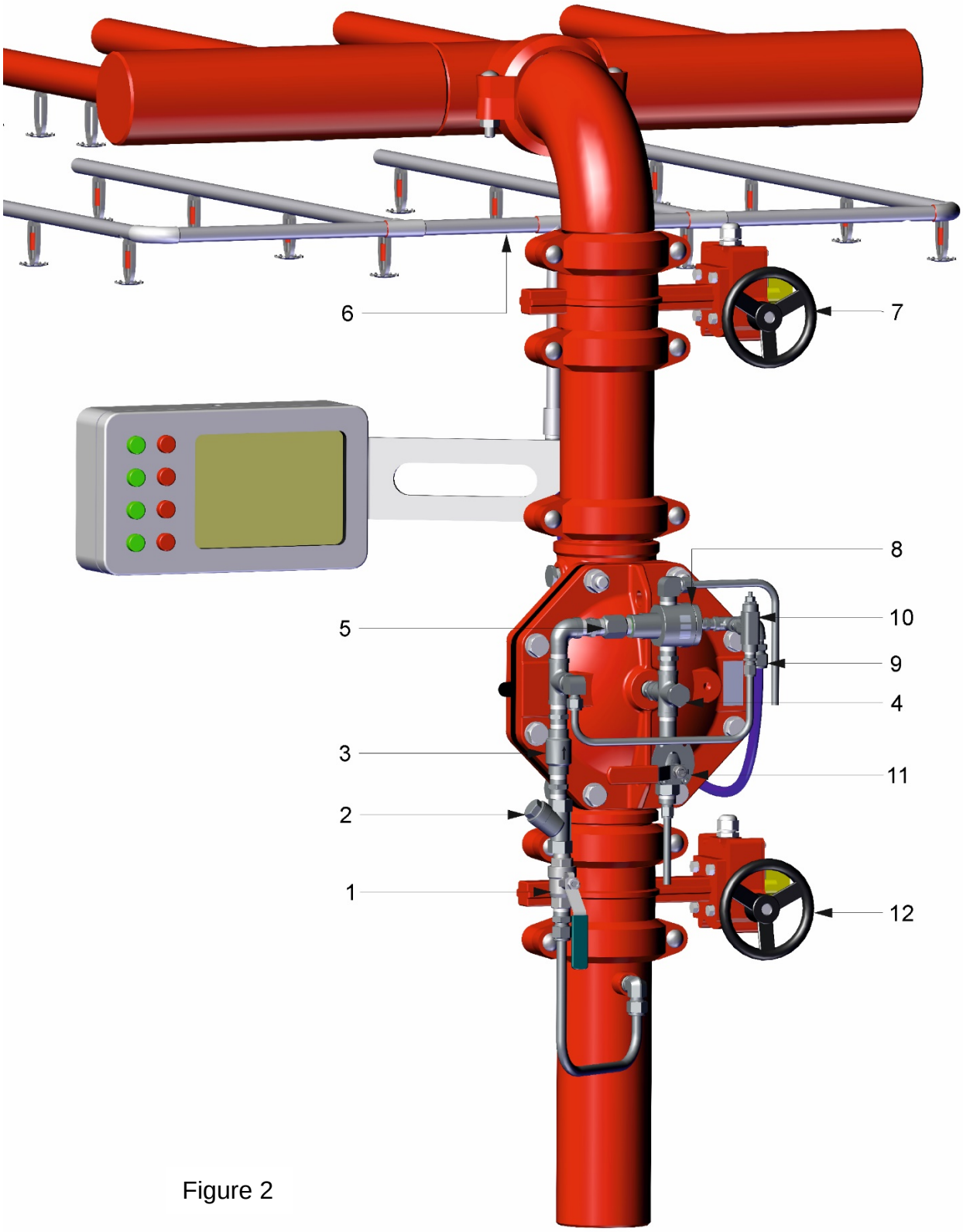

Figure 2

RAPHAEL FP

OPERATING INSTRUCTIONS (Reference Drawing - figure 2)

Commissioning the system - Phase 1

Filling and pressurizing the system.

The procedure described should be carried out after system installation completion and a comprehensive inspection.

(Reference Drawing - figure 2)

1. Make sure the upstream butterfly valve (**12**) is fully close.
2. Make sure the trim pressure supply ball valve (**1**) is Closed.
3. Make sure that Emergency valve (**11**) is fully closed.
4. Open the inspector's valve located at the very end of the wet pilot's pipeline.
5. Open the trim pressure supply valve (**1**). Let water flow out of the inspector's valve until a clear flow, free of air bubbles is observed.
6. If ok, close the inspector's valve and pressurize the trim, the FDV's control chamber, the wet pilot's line and the HAV-3's control chamber. Check the Wet pilot line's gauge for a proper pressure (not illustrated).
7. Open the downstream drain plug (**12 figure 1**) or open the downstream drain valve if equipped. The upstream drain valve should remain closed.
8. Open gradually the butterfly valve (**12 figure 2**) and make sure the downstream drain valve is not dripping. A dripping might indicate an FDV valve sealing issue. (see Troubleshooting chapter in FDV's basic valves datasheet & IOM bulletin).
9. Leave the downstream drain valve port open.

The system is ready for the "**fire situation simulation"**.

Commissioning the system - phase 2.

Fire Situation Simulation (Reference Drawing - figure 2)

The procedure described should be carried out after the system was pressurized and a comprehensive leakage inspection was commissioned.

By opening the wet pilot inspector's valve, one can simulate a fire situation and cause the system to response by opening the FDV deluge valve.

Make sure that the downstream butterfly valve (**7**) is close and the FDV's downstream drain port (or drain valve if equipped), is open.

1. Open the inspector valve at the wet pilot's most remote end.
2. Screw in the open end of the inspector's valve a sprinkler from the same type installed along the wet pilot line.
3. Observe a full water flow through the open FDV's downstream drain port/valve (**12 figure 1**)
4. **Needle valve adjustment.**

The Needle valve is a factory set but needs to be re-set during the first remote actuation as its state is affected by the wet pilot pipeline height, length and the working pressure of the deluge system. The initial adjustment is done this way:

a) Turn the needle valve fully open.
b) Make sure the FDV's downstream drain port/valve is open.
c) Make sure that a sprinkler from the same type used along the wet pilot line, was installed at the open end of the inspector's valve. If ok, open the valve.
If the deluge system opens – no additional adjustment is required.
d) ***If the Deluge system remains close, the needle valve should be closed gradually until the system trips to open.***
e) Secure the needle valve stem by tightening the counter nut firmly.

Note:

- If the needle valve is turned too open, the deluge valve might not open.
- If the needle valve is turned too close, it will take long time to pressurize the wet pilot line and close the deluge valve, after the shuttered open sprinklers replacement.

5. After needle valve adjustment, perform the chapter Commissioning the system - phase 3.- Resetting & placing in service.

RAPHAEL FP

Commissioning the system - phase 3.

Resetting & placing in service

The procedure described should be carried out after any periodic operational test simulated or real fire situation.

1. ***After Simulated fire situation**:* Close the Wet pilot line inspector's valve.
   ***After Real fire situation**: Replace* all blown-open automatic sprinklers on the Wet pilot line. The FTV valve should close.

2. Close the upstream butterfly valve (**12**)

3. Close the trim pressure supply valve (**1**).

4. Clean the trim strainer's screen (**2**). Reassemble the strainer's screen.

5. Open the trim pressure supply valve (**1**).

6. Open the upstream butterfly valve (**12**). The FDV valve should remain closed.

7. Drain the downstream spray pipeline. At drainage end, close the drain port (or drain valve if equipped).

8. Open the downstream butterfly valve (**7**).

The system is in SET state and placed in service.

RAPHAEL FP

MAINTENANCE

Prior to any stoppage of the fire protection system, a fire patrol should be placed in the area covered by the interrupted system.
Prior to generating any test procedures, turning on false alarms or turning off the alarm system, the local safety personnel and the close central fire station must be notified.

The Maintenance and inspection procedures are based on the relevant chapters at the NFPA 25.

Daily Inspection

Make sure that the deluge valve's heating system (If equipped), functions correctly and that the Fire protection valve surrounding temperature is 4°C min.

Monthly Inspection

1. Observe the FDV deluge valve and its trim for external damage: observe the trim piping and hose connections for leakage or damage.

2. Verify that the upstream and downstream separation butterfly valves (**7** & **12**) and the Trim pressure supply valve (**1**) are in fully open position.

3. Open the downstream drain plug (or open the downstream drain valve if equipped). Drain the condensation water and make sure there is no leakage or dripping. When done, plug this port or close the drain valve if equipped).

Annual test procedure

1. Conduct the monthly test & inspection procedure.

2. Perform the procedure described in chapter - **Commissioning the system - phase 2. -** Fire Situation Simulation. Check the system's proper operation.

3. Follow the procedure described in chapter - **Commissioning the system - phase 3.** - Resetting & placing in service, chapter **Resetting & placing in service.**

Every 5 years inspection procedure

This major inspection procedure includes the removal of the trim, the dismantling of the FDV's valve cover and the performance of a comprehensive internal parts examination. Then, the relevant trim accessories should be maintained, referring to their maintenance instruction. After the completion, the Annual maintenance procedure is to be conducted.

1. Close both butterfly valves (**7** & **12**) and the trim pressure supply valves (**1**).
2. Open the drain valves. Drain the FDV's control chamber using the Emergency valve (**11)**.
3. Open the Wet pilot line inspector's valve and depressurize.
4. Turn off or disconnect all relevant electrical circuits (if they exist).
5. Disconnect the Wet pilot line's connection. Release all relevant tubes fitting nuts and the central union pipe connection.
6. Remove the disassembled front trim.
7. Remove all the FDV's cover bolts. The cover will hang on its studs. Release both nuts and remove the cover carefully.
8. Observer the internals of the valve and cover for excessive scale residuals, foreign particles, damaged coating (rust, cracks or pealing).
   Worn or damaged parts should be replaced. Consult Raphael's local representative or the service department about any maintenance or part replacement issue.
9. Replace the Diaphragm with the one supplied with the system's maintenance kit. The identification tongue should point to the valve's stamped flow direction arrow side.
10. Reinstall the valve's cover: use the Anti-seize paste tube supplied in the maintenance kit for bolts and nuts lubrication. Tight them in accordance with "Bolt's torque moments table".

RAPHAEL FP

11. The trim accessory HAV-3 should be replaced in accordance with the NFPA-25, in "Standard for the inspection testing and maintenance of water-based fire protection systems".
12. Reinstall the trim carefully: avoid causing twists or dents on bent tubes and do not overtight the compression fitting's nuts.
13. When the system is fully reassembled, perform the "**Commissioning the system - phase 1** - Filling and pressurizing the system" procedure.
14. Perform the "*Annual maintenance procedure"*.

Bolt's Torque Moments Table

Valve size	1.5"	2"	2.5"	3"	4"	6"	8"	10"
Torque lb/ft	22	29	36	54	65	72	87	118

Equivalent pipe length for FDV deluge valves

Valve size	1.5"	2"	2.5"	3"	4"	6"	8"	10"
Equivalent length value ft (m)	11 (3.6)	24 (7.3)	25 (7.6)	28 (8.5)	31 (9.4)	46 (14)	72 (21.9)	117 (35.6)

RAPHAEL FP

MARKING

The FDV valves are marked by a laser engraved, black anodized, 63 x 30 mm 0.8mm (0.031”) thick aluminum metal plate, riveted to the valve’s cover.

The marking plate contains data about:

- *Company name and trademark.*
- *Application’s type* – ***FDV-3W-AH1*** 3-way Hydraulic actuated, Remote Reset.
- *The Application’s part number* (P/N) - actuation type–valve properties
- *Rated pressure* - 250 psi.
- *Equivalent Length: reference table* - page 13.
- *Serial Number* – work order-MM-YY-xx (number in batch 01-99)
- *The UL listing mark & QR code.* – xxxxxx
- *The FM approved mark*
- *The Application’s* diameter in inch - xx”

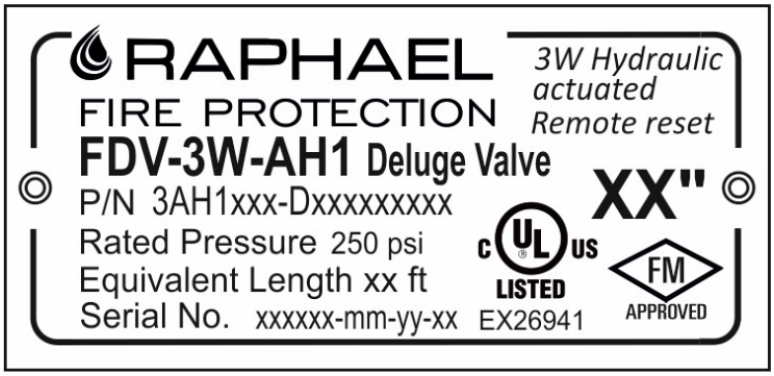

RAPHAEL FP

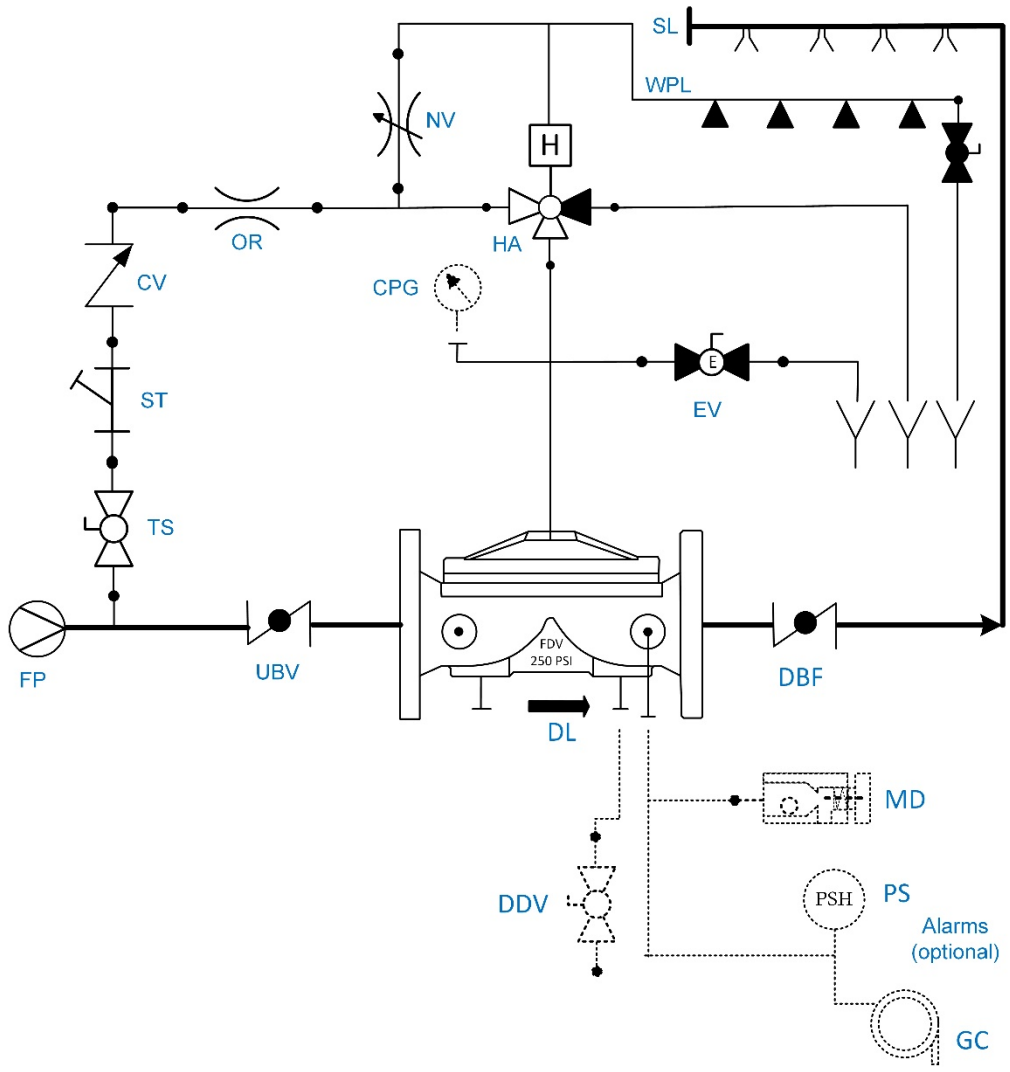

TS -	Trim supply	FP -	Fire Pump		Water lines
ST -	Strainer	SL -	Sprinkles Line		Optional
HA -	HAV-3 3-way hydraulic actuator	NV -	Needle Valve		
CV -	Check Valve				
OR -	Orifice				
DL -	Deluge Valve				
EV -	Manual Emergency Valve	**Optional**			
S3 -	3-way Solenoid valve	CPG -	Control Chamber P. gauge		
WPL -	Wet Pilot Line	GC -	Gong connection		
UBV -	Upstream Butterfly Valve	PS -	Pressure Switch		
DBV -	Downstream Butterfly Valve	MD -	MADV – Manual / Automtic Drain Valve		

RAPHAEL, founded in 1949, is the first Israeli manufacturer of water control valves. RAPHAEL´s research department constantly strives to introduce new and innovative products and solutions for water control systems including water works, fire-protection and irrigation systems.



RAPHAEL

RAPHAEL Valves Industries (1975) Ltd.

North Industrial Zone Or Akiva, 3063927 P.O.Box 555, Israel

Tel. +972 4 6263555 | info@raphael-valves.com | raphael-valves.com

Nov-25