Hydraulically Actuated, Remote Reset Deluge Valve

FDV-3W- AH1

The FDV-3W-AH1 fire protection system is based on Raphael's FDV deluge valve and is equipped with a hydraulically actuated control trim. The FDV functions as a fire protection control valve for deluge sprinkler systems and is specifically designed for installation in hazardous environments. It is suitable for both vertical and horizontal installations and features a globe-pattern, line-pressure-operated design with a direct elastomeric diaphragm seal.

The valve contains no balancing spring and no metallic components in the wetted area. Its hydrodynamic flow path ensures high flow rates with minimal head loss.

The FDV-3W-AH1 deluge system is hydraulically actuated and can be reset remotely. When one or more automatic sprinklers in the wet pilot detection line are exposed to flame heat and shatter open, the pressure in the detection line decreases. This pressure drop also reduces the pressure in the three-way actuator's control chamber, causing the actuator to change its state. In this state, the actuator drains the deluge valve's control chamber, allowing the valve to open fully and admit water into the spray sprinkler system.

When the detection line is re-pressurized, the actuator returns to its initial state. This allows upstream pressure to flow into the deluge valve's control chamber, re-pressurizing it and closing the valve. Consequently, water flow to the spray sprinkler system stops.

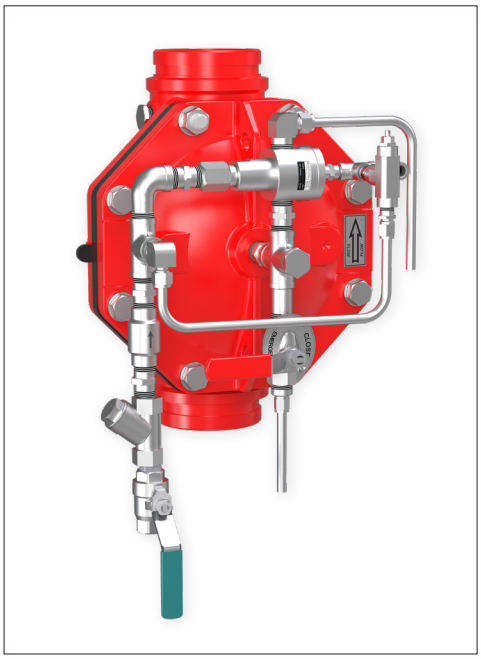

The deluge system includes an emergency valve that bypasses the fire detection system for manual operation. It is suitable for use with automatic sprinklers on the wet pilot line and with open nozzles on the main spray pipelines.

MARKETS

Commercial, Industry, Marine

P.O.G., Storage, Residential, Airport

TECHNICAL DATA

FLUID:
Water, Brackish water, Sea water, Foam

SIZE RANGE:
40mm to 250mm (1½'' to 10")

AVAILABLE CONNECTIONS ENDS:
Flange*Flange, Groove*Groove, Flange*Groove, Groove*Flange, Thread*Thread

PRESSURE NOMINAL:
250 psi (17.2 bar)

APPROVALS

ADVANTAGES

- Only three parts: body, diaphragm, and cover plate. No wetted metal spring inside the control chamber.
- Full-bore, unobstructed design.
- Simple manual reset to the standby position without closing the OS&Y or other system valves.
- Open fail-safe valve, maintained in the standby closed position.
- Low maintenance cost: the valve can be serviced in-line and includes only one replaceable part — a long-life elastomeric diaphragm.
- Complies with NFPA 25, the standard for the inspection, testing, and maintenance of water-based fire protection systems.

CHARACTERISTICS

- Hydrodynamic pattern design ensures high flow rates with minimal head loss.
- The valve automatically trips open when water pressure in its control chamber is gradually released. The trip is actuated by a pressure drop in the pilot line caused by flame heat that triggers one or more automatic sprinklers to open.
- Soft closing upon re-pressurization of the valve's control chamber—by line pressure or another independent water source—prevents surges.

The FDV-3W-AH1 three-way control principle ensures full valve opening with maximum flow rate and minimal head loss.

The system resets to the standby closed position by replacing the opened sprinkler(s) and re-pressurizing the pilot line.

Schematic drawing: FDV-3W-AH1

Set position

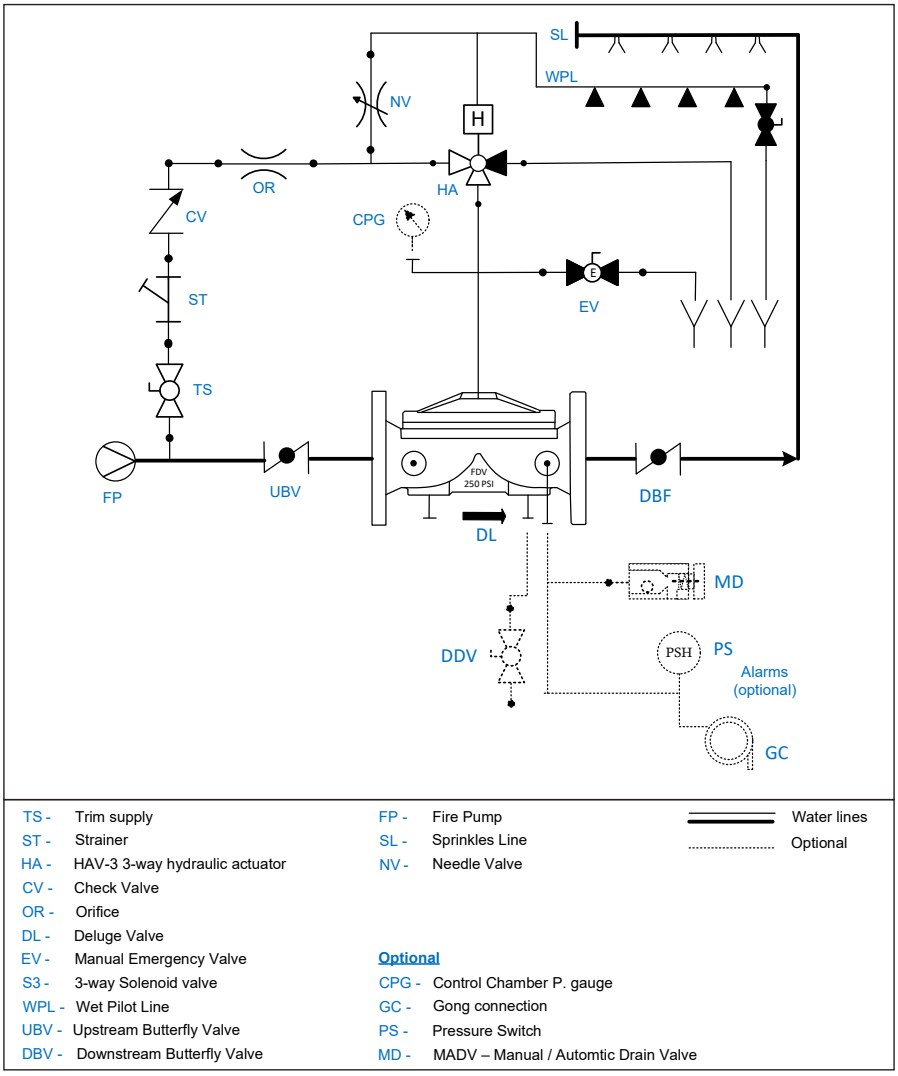

TS -	Trim supply	FP -	Fire Pump		Water lines
ST -	Strainer	SL -	Sprinkles Line		Optional
HA -	HAV-3 3-way hydraulic actuator	NV -	Needle Valve		
CV -	Check Valve				
OR -	Orifice				
DL -	Deluge Valve				
EV -	Manual Emergency Valve	**Optional**			
S3 -	3-way Solenoid valve	CPG -	Control Chamber P. gauge		
WPL -	Wet Pilot Line	GC -	Gong connection		
UBV -	Upstream Butterfly Valve	PS -	Pressure Switch		
DBV -	Downstream Butterfly Valve	MD -	MADV – Manual / Automtic Drain Valve		

OPERATION

SET POSITION

Pressurized water in the valve's control chamber is retained by the check valve (CV) and the closed emergency valve (EV), keeping the FDV deluge valve in a closed position.

The control chamber of the hydraulic actuator HAV-3 (HA) is pressurized by the Wet Pilot Line (WPL). This pressure holds the actuator open, allowing upstream water to flow into the deluge valve's control chamber and thereby maintaining the valve in its closed condition.

FIRE SITUATION

When one or more automatic sprinklers in the Wet Pilot detection Line (WPL) are exposed to fire heat and operate, the line pressure drops. As a result, the pressure in the control chamber of the 3-way hydraulic actuator (HA) also decreases, causing it to change state.

In this new position, the actuator vents the deluge valve's control chamber to drain, opening the deluge valve and allowing water to flow into the sprinkler system (SL).

RESET POSITION

To reset the system, all operated automatic sprinklers in the Wet Pilot Detection Line (WPL) must be replaced.

The Wet Pilot Line and the actuator's (HA) control chamber are then re-pressurized, returning the actuator to its normal position.

In this state, the actuator permits flow from the Trim Supply valve (TS), through the orifice (OR), into the deluge valve control chamber. This re-pressurization closes the deluge valve and stops water discharge from the sprinkler system.

Raphael reserves the right to change the contents without notice

FDV-3W-AH1

Typical installation

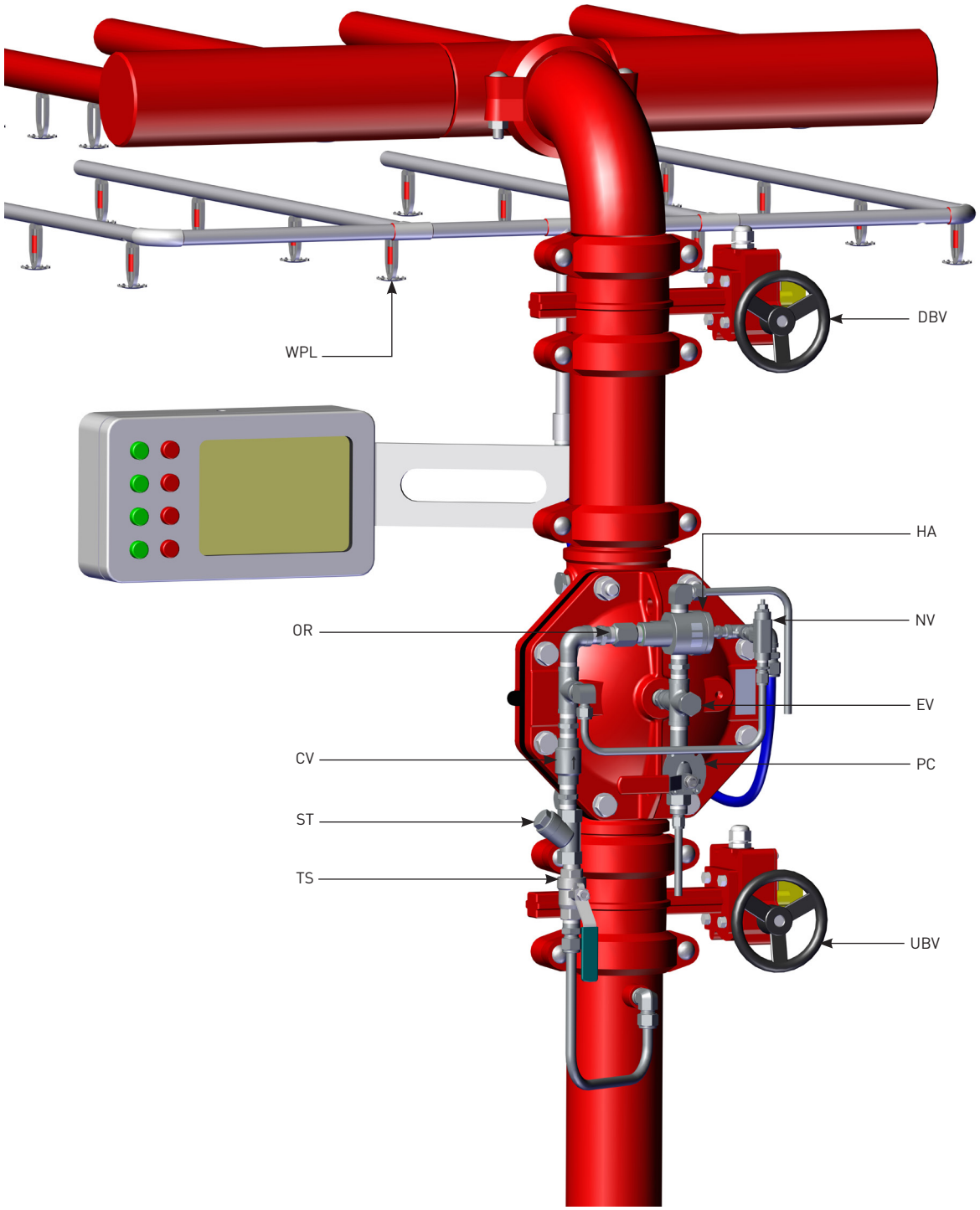

HA - Hydraulic actuator 3 way
EV - Emergency Unit
NV - Needle Valve
UBV - Upstream Butterfly Valve
DBV - Downstream Butterfly Valve
PC - Pressure gauge connection
WPL - Wet Pilot Line
CV - Check Valve
OR - Orifice
SR - "Y" Strainer
TS - Trim Supply

Parametric drawing:

FDV-3W-AH1

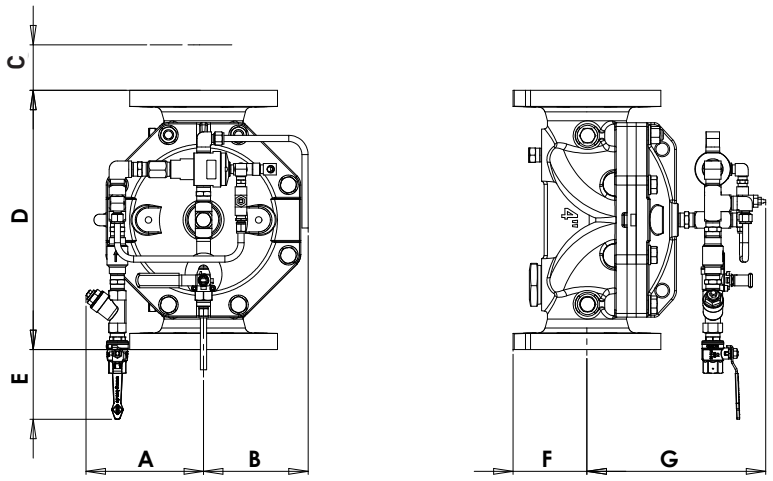

Dimensions Table

Size	1.5"		2"		3"		4"		6"		8"		10"	
	mm	inch	mm	inch	mm	inch	mm	inch	mm	inch	mm	inch	mm	inch
A	181	7	181	7	181	7	181	7	197	7.7	250	9.8	308	12.1
B	161	6.3	161	6.3	161	6.3	161	6.3	177	7	231	9	308	12.1
C	35	1.3	27	1	N/A	N/A	N/A	N/A	N/A	N/A	N/A	N/A	N/A	N/A
D	202	8.0	325	8.6	324	12.7	400	15.7	464	18.2	570	22.4	766	30.1
E	206	8.1	196	7.7	143	5.6	107	4.2	76	3	N/A	N/A	N/A	N/A
F	52	2	58	2.3	100	3.4	114	4.5	141	5.5	172	6.8	203	7.8
G	240	9.4	253	9.9	283	11.1	320	12.6	386	15.2	420	16.5	510	20
Kg/lb	7.3	16.2	9.2	20.3	26.3	58	42	92.6	52.7	116	98	216	227	500

Factory Standard

MAIN VALVE

BODY & COVER

- Ductile iron
- Cast Steel WCB
- Stainless Steel CF8
- Stainless Steel CF8M
- Nickel Aluminum Bronze

ELASTOMERS:

- NBR, 3-layered reinforced Natural Rubber
- EPDM, 3-layered reinforced

COATING:

- Base layer – high built Epoxy FBE
  Top layer – electrostatic Polyester powder RAL 3000
- Rilsan Polyamide based (Nylon 11)
- Internal – vitreous Enamel
  External – Epoxy/Polyester powder RAL 3000

TRIM

PIPING & TUBING:

- Stainless Steel 316
- Copper/Brass
- Cupro-Nickel
- Monel®

FITTINGS:

- Stainless Steel 316
- Brass
- Super Duplex
- Cupro-Nickel
- Monel®

ACCESSORIES:

- Brass
- Stainless steel 316/CF8M
- Nickel Aluminum Bronze
- Monel®
- Cupro-Nickel

PLEASE SPECIFY

- Working Media
- Ambiental conditions
- Min/Max operating flow
- Min/Max operating pressure
- System working pressure
- System installation orientation
- Deluge valve ends and standard
- Deluge valve material and coating
- Trim materials
- Pilot line installation height
- Additional accessories needed
  Pressure gauge
  Pressure switch
  Drain valve (manual or automatic)
  Gong

For more detailed technical information, please refer to chapter Engineering Data.

Raphael reserves the right to change the contents without notice