RAF
IRRIGATION CATALOGUE

RAPHAEL
BY TALIS

RAF IRRIGATION CATALOGUE

TALIS

Control Valve

+

+

additional features

TABLE OF CONTENTS

RAF RANGE

Range Description		6
RAF main valve description		8

RAF SERIES PN-10

RAF 01	Manual Control Valve 3-W Cock Valve	14
RAF 31P	Electric Control Valve (NC), 3-W Plastic solenoid	16
RAF 33	Electric Control Valve (NO), 3-W Plastic solenoid	18
RAF 0G3	Hydraulic Remote Control Valve, 3-W Galit solenoid	20
RAF 6R	Pressure Reducing Control Valve, 3-W Plastic Pilot	22
RAF-6R-31	Electric Pressure Reducing Control Valve, 3-W Plastic Pilot	24
RAF 8R	Pressure Sustaining Control Valve, 3-W Plastic Pilot	26
RAF 8R 31	Electric Pressure Sustaining Control Valve, 3-W Plastic Pilot	28
RAF 68R	Pressure Reducing & Sustaining Control Valve, 3-W Plastic Pilot	30
RAF 7R	Flow Rate Control Valve, 3-W Plastic Pilot	32

RAF SERIES PN-16

RAF 31	Electric Control Valve (NC), 3-W Metal solenoid	36
RAF 33	Electric Control Valve (NO), 3-W Metal solenoid	38
RAF 10	Float Level Control Valve, 2-W Float Pilot	40
RAF 13	Bi-Level Float Control Valve, 3-W Float Pilot	42
RAF 1031	Electric Float Control Valve, 3-W Metal solenoid	44
RAF 62	Pressure Reducing Control Valve, 2-W Metal Pilot	46
RAF 60	Pressure Reducing Control Valve, 2-W Metal Pilot	48
RAF 63B	Pressure Reducing Control Valve, 3-W Metal Pilot	50
RAF 682	Pressure Reducing & Sustaining Control Valve, 2-W Metal Pilot	52
RAF 68	Pressure Reducing & Sustaining Control Valve, 2-W Metal Pilot	54
RAF 683B	Pressure Reducing & Sustaining Control Valve, 3-W Metal Pilot	56
RAF 82	Pressure Sustaining Relief Control Valve, 2-W Metal Pilot	58
RAF 80	Pressure Sustaining Relief Control Valve, 2-W Metal Pilot	60
RAF 83B	Pressure Sustaining Control Valve, 3-W Metal Pilot	62
RAF 80Q	Quick Pressure Relief Control Valve, 2-W Metal Pilot	64
RAF 70	Flow Rate Control Valve, 2-W Metal Pilot	66

PLASTIC PILOTS

PMR	3-W Pressure Reducing Mode	71
PMSR	3-W Pressure Sustaining Mode	72
PMF	3-W Pressure Flow Control Mode	73

SMART SOLUTIONS

APOLLO	Apollo Smart Cellular Data Logger	82
ULTRAF	Ultraf Smart Ultrasonic Hydrometer	84

ORDERING GUIDE 86

IRRIGATION

ONE OF MANKIND'S OLDEST TECHNICAL APPLICATIONS IS THE IRRIGATION OF FIELDS FOR AGRICULTURE. THIS ALLOWED THE FIRST ADVANCED CIVILISATIONS TO FLOURISH ALONG THE NILE, EUPHRATES AND TIGRIS AND IS STILL TODAY A DECISIVE FACTOR IN FEEDING THE GROWING WORLD POPULATION.

CLIMATE CHANGE EFFECTS ARE RESULTING IN INCREASING FARMERS' NEED TO IRRIGATE, NOT ONLY IN THE SOUTHERN AND CENTRAL PART OF EUROPE, BUT ALSO IN NORTHERN EUROPE. THEREFORE, SUSTAINABLE ADAPTATION STRATEGIES IN NEW AND MATURE MARKETS NEED INNOVATION.

HIGH
PERFORMANCE

MAINTENANCE
FRIENDLY

ROBUST

SECURED

REDUCE LEAKAGE

PRESSURE, LEVEL & FLOW CONTROL

TALIS' ANSWERS

Of great importance here is that the valuable commodity water is used economically, but also that sufficient irrigation takes place for plant growth. Equally important is the transportation of the water to the irrigation site with as little loss and as cost-effectively as possible.

The functional range of TALIS valves therefore extends from obtaining the water from surface waterways, the ground water or specially installed water storage facilities to distributing the water to the spray-irrigation systems. Particularly for use in large-scale irrigation systems in southern regions, the valves must be robust and simple to use, but at the same time inexpensive to acquire and easy to install.

Part of TALIS group and founded in 1949, **RAPHAEL** offers a huge range of automatic control valves. This gives to our customers the possibility to manage properly their irrigation network by controlling the pressure, the level and the flow. Even if these control valves can work by their own, remote control is still possible. Thus, numerous solutions are offered, all based on an ingenious principle: using a valve without metallic part inside - maintenance free- and adapt a pilot circuit on it to get the requested function.

RAF IRRIGATION

RAF Valves are used for general water supply and irrigation. The valves are made of only three parts; each one is made of durable materials.
The inner flow passages are streamlined and coated with low-friction materials.
This provides quiet flow in directions, low head loss and minimal wear.
Valves operate with a patented reinforced diaphragm, which eliminates the need for a retaining metal spring.
The special elastic design enables gradual and precise opening or closing of the valve.
By eliminating the metal spring, the RAF is virtually maintenance free.

MARKETS

Irrigation

TECHNICAL DATA

Nominal Diameter (DN): from 25 to 400 mm (1.5" to 16")

STANDARD MATERIALS

Body: Cast Iron
Cover: Cast Iron
Diaphragm: Natural Rubber
Nuts: Plated Steel
Washer: Plated Steel
Bolts: Plated Steel
Coating: Rilsan

OPTIONAL MATERIALS

Body:
- Ductile Iron
- Bronze
- Stainless Steel

Cover:
- Ductile Iron
- Bronze
- Stainless Steel

Diaphragm zinc:
- EPDM
- Nitrile

Nuts: Stainless Steel

Washer: Stainless Steel

Bolts: Stainless Steel

Coating: Epoxy Powder Internal - Enamel

CHARACTERISTICS

- **A new concept of diaphragm hydraulic control valve** consisting of three basic parts: Body, cover and diaphragm
- The «no-spring» diaphragm valve **ensures even distribution of pressure** on the sealing area, **prevents diaphragm deformation** and **provides longer service life**. The valve contains a minimum number of moving parts and requires practically no maintenance
- The patented rib-style diaphragm has several advantages. Valve opening and closing is gradual and **eliminates risk of water hammer, vibration and noise**
- It provides **accurate and perfect pressure regulation** at low flow-rates
- Full valve opening is obtained at a very low pressure
- One diaphragm controls the whole pressure range

RAF METAL CONTROL VALVE for irrigation offers the same application range as water supply control valves.
Thus, applications are numerous: pressure, level, flowrate or electrical control are available in PN 10 or PN 16, using tubing in plastic / brass / stainless steel. Pilot material is defined according to the PN .

RAF WITH PLASTIC TRIM AND BRASS PILOT

RAF WITH ON/OFF ELECTRICAL REMOTE CONTROL

Pilots adjustment ranges:

- Pressure reducing or pressure sustaining: 2 to 10 bar / 0.5 to 4 bar / 0.5 to 6 bar / 2 to 16 bar.
- Both: 2 to 10 bar as a standard.

APPLICATION PROVIDED BY RAF

RAF Pressure Reducing – Reducing the pressure on the main network, regulating multi-level networks, protecting the network against high upstream pressure variations, emergency supply from one pressure zone to another, pressure control on membrane treatment plant, reducing leakage thanks to the control of the supplying pressure.

RAF Pressure Sustaining (or relief):

- Sustaining the pressure in the network regardless of flow demand or prioritizing pressure zones (in-line installation), e.g raise a piezometrical line to supply a high altitude area or protect a pump.
- Protecting the network against excessive pressure (off-line installation), protecting a pump from no flow rate operating...

GOOD TO KNOW

RAF exists also in angular version: RAF-A.

RAF is available in reduced bore version for DN 80/100/125/150.

Pre-sales and after-sales support departments help to define the right solution (tailor-made) and the right sizing.

Automatic control valves are scalable by adding or removing functions, and by modifying pilot spring range.

RAF leads the market in Fire Protection Regulation.

All RAPHAEL automatic control valves range can also be controlled by solenoids, optionally combined with pilot(s).

Solenoid Voltage: 6/12/24/48/110/230V direct or alternative

RAF SERIES

PART LIST OF MAIN VALVE STANDARD FEATURE:

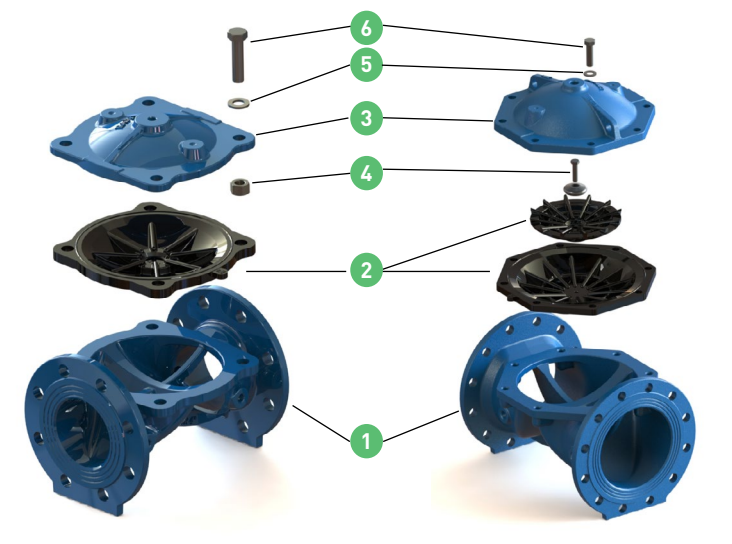

Ref	Name	Material
1	Body	Ductile iron Rilsan coating
2	Diaphragm	Natural Rubber
3	Cover	Ductile iron Rilsan coating
4/5/6	Fixing elements	-

MARKETS

Green house

Landscape

Mechanised Irrigation

Open field Irrigation

Water Transmission

TECHNICAL DATA

Fluid: drinking water, or filtered water

Nominal Diameter (DN): 25 mm-350 mm (1" to 14")

Nominal Pressure (PN):
Nominal: 10 – 16
Working: 16 bar

Working temperature: up to 70 °C

Body material: cast iron

Pipe connection: flanges, thread or grooved

FEATURES AND BENEFITS

Maintenance Free Valve by having no spring inside and a simple and reliable three parts valve: cover, patented diaphragm and body.

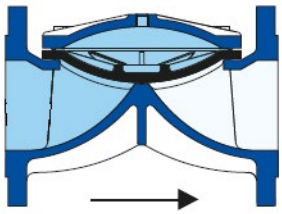

Normally close Valve

Stability and accurate regulation even at low flow rate based on the patented diaphragm integrated ribs to replace spring. This permit gradual opening and closing with no risk of noise, vibration or water hammer.

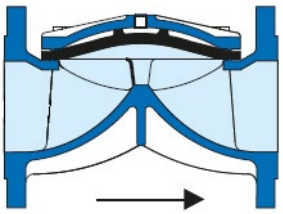

Normally open Valve

OPTIONAL FEATURES:

- **#S:** mains valve body and cover in stainless steel
- **#D:** diaphragm in EPDM (potable water approved)
- **#F:** Fixing elements in stainless steel
- **#I:** Visual indicator
- **#E:** Electric Limit Switch

RAF HIGH-FLOW IN LINE

HYDRAULIC DATA

Nominal Diameter		Kv factor Fullv opened Valve	Control Chamber Volume
mm	inch		Liter
25	1	35	0.065
40	1.5	40	0.065
50	2	65	0.08
65	2.5	110	0.16
80	3	150	0.3
100	4	280	0.78
150	6	330	1.56
200	8	680	3.5
250	10	1300	7.6
300	12	1300	7.6
350	14	1850	7.6

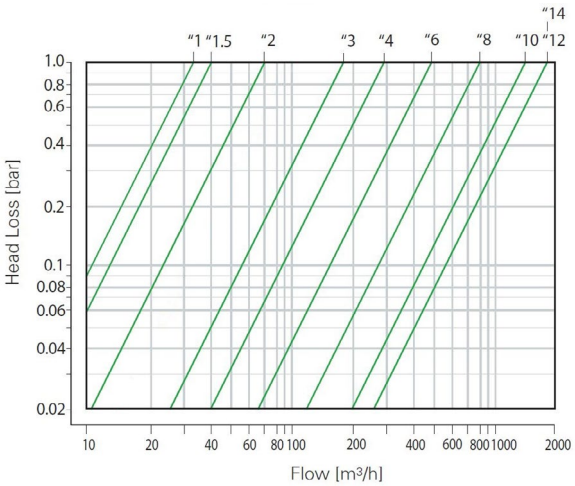

Kv=Valve flow coefficient

Q=Flow rate [m³/h]

ΔP=Head loss across the valve [bar]

$Q=Kv\sqrt{\Delta P}$

DIMENSIONS

Pattern end connection

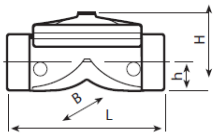

Thread (#NP or #0)

DN		L	H	B	h	Weight
mm	inch	mm	mm	mm	Kg	Kg
25	1	156	70	94	21	1.5
40	1.5	159	80	96	29	2
50	2	190	100	521	38	3.5
65	2.5	216	110	125	46	5
80	3	290	138	200	50	11
100	4	346	220	230	60	16.5

Pattern end connection

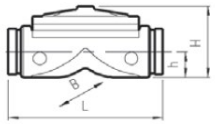

Groove (#G)

DN		L	H	B	h	Weight
mm	inch	mm	mm	mm	Kg	Kg
25	1	156	70	94	21	1.4
40	1.5	159	80	96	29	1.5
50	2	190	100	521	38	3
65	2.5	216	110	125	46	4.7
80	3	290	138	200	50	10.8
100	4	346	220	230	60	18
150	6	412	241	300	88	33
200	8	470	350	354	125	51

Pattern end connection

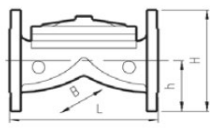

Flanged (#3)

DN		L	H	B	h	Weight
mm	inch	mm	mm	mm	Kg	Kg
50	2	190	159	165	76	7.9
65	2.5	216	173	185	80	9.3
80	3	283	200	200	100	17.5
100	4	305	220	230	99	26
150	6	406	295	300	142	46
200	8	470	383	354	160	67.5
250	10	635	430	464	197	111
300	12	749	474	480	234	151
350-300-350	14D	749	520	520	260	177
350-400-350	14	766	648	616	267	257
400	16	860	705	616	298.5	305

RAF HIGH FLOW ANGLE (#A)

HYDRAULIC DATA

Nominal Diameter		Kv factor Fullv opened Valve	Control Chamber Volume
mm	inch		L
50	2	62	0.08
65	2.5	90	0.16
80	3	155	0.3
100	4	200	0.78
150	6	470	1.56

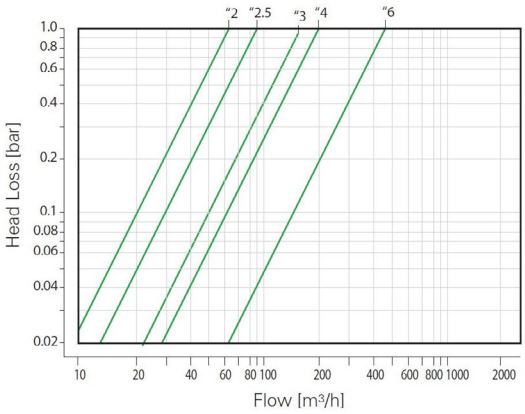

DIMENSIONS

Pattern end connection

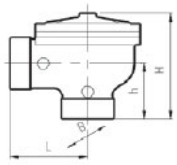

Thread (#NP or #0)

DN		L	H	B	h	Weight
mm	inch	mm	mm	mm	Kg	Kg
50	2	90	150	521	81	4.2
65	2.5	117	160	125	83	7
80	3	148	205	200	107	12
100	4	150	227	230	118	15.9

Pattern end connection

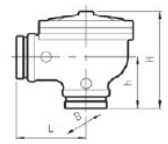

Groove (#G)

DN		L	H	B	h	Weight
mm	inch	mm	mm	mm	Kg	Kg
50	2	90	150	521	81	4
65	2.5	117	160	125	83	5
80	3	148	205	200	107	11
100	4	150	227	230	118	15.6
150	6	206	317	300	150	32
200	8	225	400	354	170	45.5

Pattern end connection

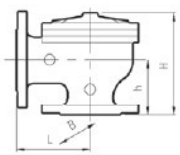

Flanged (#3)

DN		L	H	B	h	Weight
mm	inch	mm	mm	mm	Kg	Kg
50	2	112	159	561	77	8.1
65	2.5	122	160	185	83	11
80	3	154	210	200	115	19
100	4	177	230	230	113	26.5
150	6	218	315	300	148	48.7
200	8	225	400	354	170	62.5

RAF D IN LINE (#D)

HYDRAULIC DATA

Nominal Diameter		Kv factor Fullv opened Valve	Control Chamber Volume
mm	inch		L
80	3D	130	0.16
100	4D	170	0.3
125	5D	290	0.7
150	6D	300	0.7

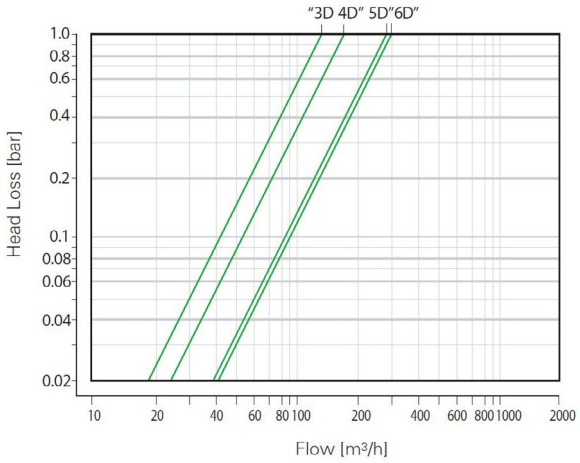

DIMENSIONS

Pattern end connection

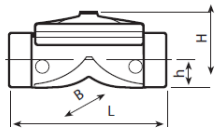

Thread (#NP or #0)

DN		L	H	B	h	Weight
mm	inch	mm	mm	mm	Kg	Kg
80	3D	244	127	138	50	5.5

Pattern end connection

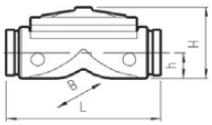

Groove (#G)

DN		L	H	B	h	Weight
mm	inch	mm	mm	mm	Kg	Kg
80	3D	244	127	138	50	5.2
100	4D	285	180	200	74	17.5
150	6D	330	260	230	96	19.8

Pattern end connection

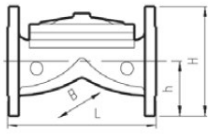

Flanged (#3)

DN		L	H	B	h	Weight
mm	inch	mm	mm	mm	Kg	Kg
80	3D	216	192	200	92	11.4
100	4D	283	222	222	111	20
125	5D	305	243	250	120	29.5
150	6D	325	285	385	143	34.5

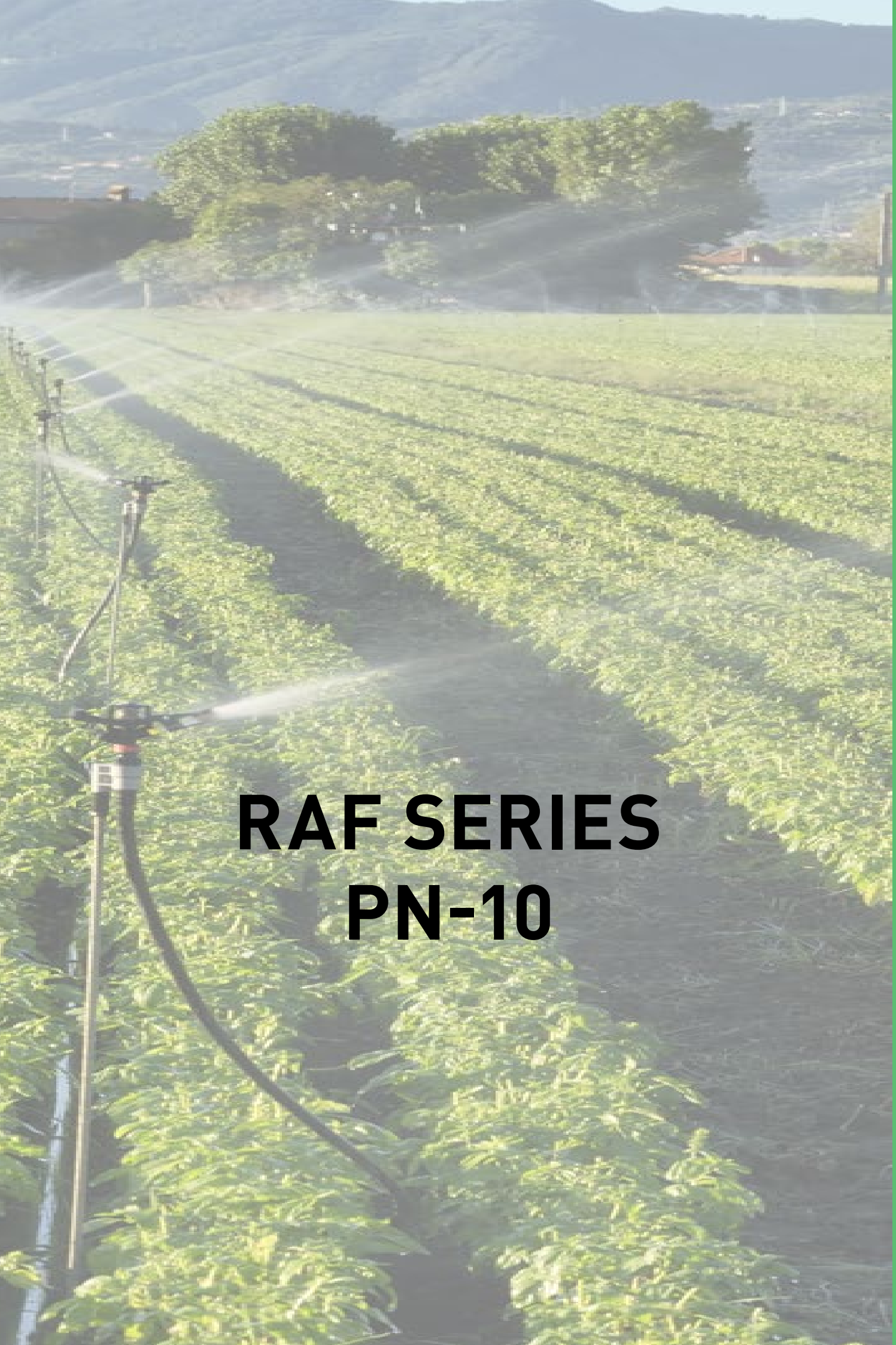

RAF SERIES
PN-10

RAF SERIES

RAF 01

Manual Control Valve 3-W Cock Valve

The RAF 01 manual valve is a Normally Closed (N.C) line pressure hydraulically actuated.
The 3-W selecting cock valve changes positions: The RAF 01 valve opens when 3-W selecting cock valve is turned to position "0".
The RAF 01 shuts off when 3-W selecting cock valve is turned to position "C". The 3-W ball valve configuration together with Raphael's patented diaphragm enables smooth opening and surge free shut off.

Maximal Nominal Pressure: 10 bar / 16 bar

MARKETS

Green house
Landscape
Mechanised Irrigation
Open field Irrigation
Water Transmission

TECHNICAL DATA

Fluid: raw water or filtered water

Nominal Diameter (DN): from 25 to 400 mm (1" to 16")

Available connections: Flanged, Threaded or Grooved

Nominal Pressure (PN): 10 bar / 16 bar

Medium Temperature: up to 70 °C

Body material: Ductile Iron

Standard Controls: Manual control valve with Raphael's 3-W selecting cock valve.

APPROVALS

W/O

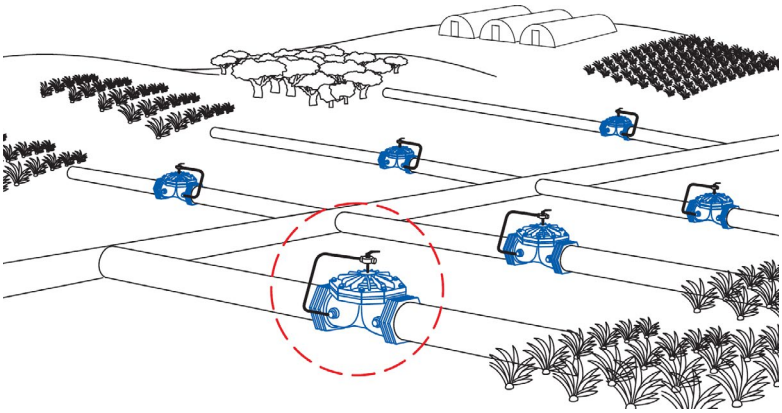

TYPICAL APPLICATIONS

- Local operation of hydraulic valve by a manual command.
- Irrigation water distribution and field control connecting to irrigation controller

FEATURES

- RAF valve two-layered Epoxy-polyester coated
- Self-cleaning screen filter
- 3-W manual cock valve
- Polyethylene plastic tubing

OPTIONAL FEATURES:

- Rilsan coating
- Large capacity external filter
- Reinforced plastic tubing and brass fittings.

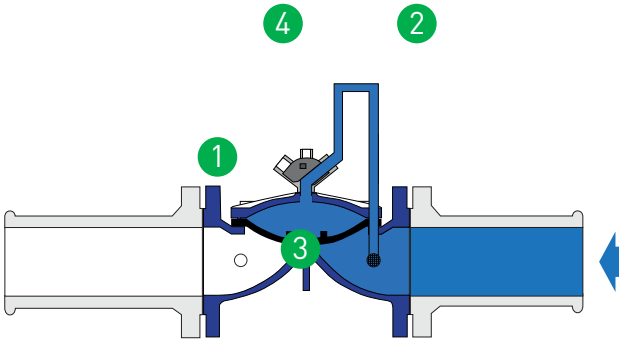

RAF-01 3-W Electric Control Valve (N.C.)

Ref	Name	Material
1	Main valve	Technical data see valve section
2	Tubing	Reinforced plastic tubing
3	Self-cleaning screen filter	Plastic
4	3W selecting cock valve	

Nominal Diameter		Max. Flow Rate
mm	inch	m3/h
25	1	22
40	1.5	25
50	2	41
65	2.5	70
80-65-80	3D	70
80	3	95
100-80-100	4D	95
100	4	177
125	5	177
150-100-150	6D	177
150	6	240
200	8	430
250	10	822
300	12	822
350-250-350	14D	822
350	14	1170
400	16	1233

Nominal diameter only, for full dimensions please refer to engineering bulletin.

RAF SERIES

RAF 31P

Electric Control Valve (N.C.)

3-W Plastic Solenoid

The RAF 31 electric valve is a Normally Closed (N.C) line pressure hydraulically actuated.
The RAF 31 (N.C) valve opens when 3-W plastic solenoid valve is energized. The RAF 31 shuts off when 3-W plastic solenoid valve is de-energized.
The 3-W electric solenoid valve configuration together with Raphael's patented diaphragm enables smooth opening and surge free shut off.

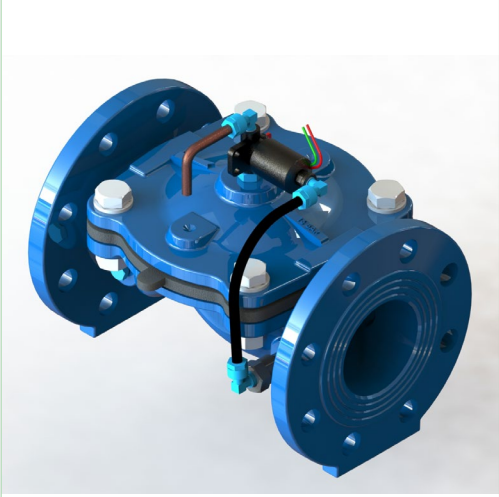

Maximal Nominal Pressure: 10 bar

Setting Range: 0.6 to 6 bar

MARKETS

Green house

Landscape

Mechanised Irrigation

Open field Irrigation

Water Transmission

TECHNICAL DATA

Fluid: raw water or filtered water

Nominal Diameter (DN):
from 25 to 150 mm (1" to 6D")

Available connections: Flanged, Threaded or Grooved

Nominal Pressure (PN):
10 bar

Medium Temperature:
up to 70 °C

Body material: Ductile Iron

Standard Controls: Raphael's 3-W plastic pilot, polyethylene plastic tubing and plastic fittings.

ELectric valve control with Raphael's 3-W solenoid activated by any voltage, polyethylene plastic tubing and brass fittings

APPROVALS

W/O

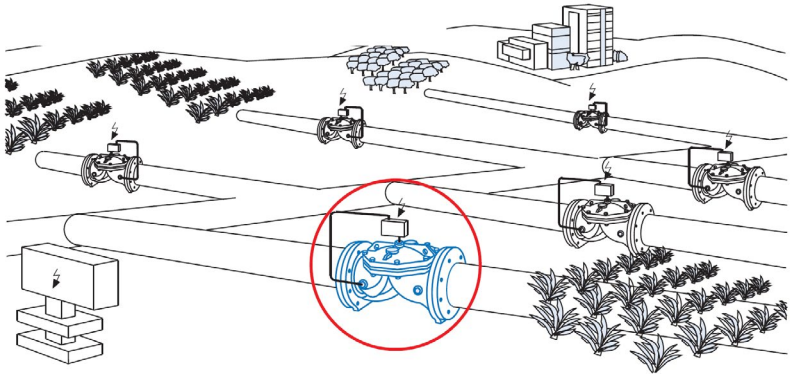

TYPICAL APPLICATIONS

- Water supply systems with medium pressure rating
- Remote operation of hydraulic valve by an electric command
- Irrigation water distribution and field control

FEATURES

- RAF valve two-layered Epoxy-polyester coated
- Self-cleaning screen filter
- 3-W (N.O) plastic solenoid
- Polyethylene plastic tubing
- Power source 24V (AC) 50/60Hz

OPTIONAL FEATURES:

- Rilsan coating
- Large capacity external filter
- 2-W (N.O.) plastic solenoid
- Power source - 110V, 220V (AC) & 9V, 12V, 24V (DC)

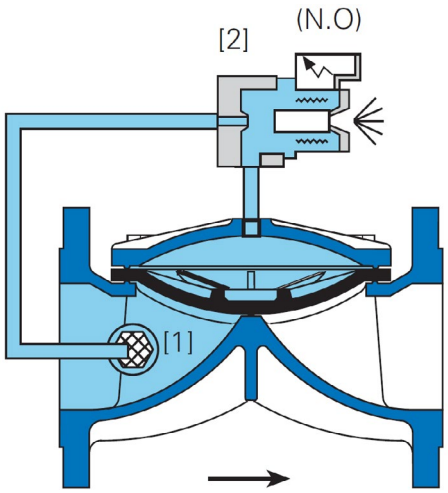

RAF-31 3-W Electric Control Valve (N.C.)

Ref	Name
1	Self-cleaning screen filter
2	3-W Valve
3	3-W (N.O.) plastic solenoid

Nominal Diameter		Max. Flow Rate
mm	inch	m3/h.
25	1	22
40	1.5	25
50	2	41
65	2.5	70
80-65-80	3D	70
80	3	95
100-80-100	4D	95
100	4	177
125	5	177
150-100-150	6D	177

Nominal diameter only, for full dimensions please refer to engineering bulletin.

RAF SERIES

RAF 33P

Electric Control Valve (N.O.)
3-W Plastic Solenoid

The RAF 33 electric valve is a Normally Open (N.O) line pressure hydraulically actuated. The RAF 33 (N.O) valve opens when 3-W electric solenoid valve is de-energized. The RAF 33 (N.O) valve shuts off when 3-W electric plastic solenoid valve is energized.
The 3-W electric solenoid valve configuration together with Raphael's patented diaphragm enables smooth opening and surge free shut off.

Maximal Nominal Pressure: 10 bar

Setting Range: 0.6 to 6 bar

MARKETS

Green house
Landscape
Mechanised Irrigation
Open field Irrigation
Water Transmission

TECHNICAL DATA

Fluid: raw water or filtered water

Nominal Diameter (DN):
from 25 to 150 mm (1" to 6D")

Available connections: Flanged, Threaded or Grooved

Nominal Pressure (PN):
10 bar

Medium Temperature:
up to 70 °C

Body material: Ductile Iron

Standard Controls: Raphael's 3-W plastic pilot, polyethylene plastic tubing and plastic fittings.

ELectric valve control with Raphael's 3-W solenoid activated by any voltage, polyethylene plastic tubing and brass fittings.

APPROVALS

W/O

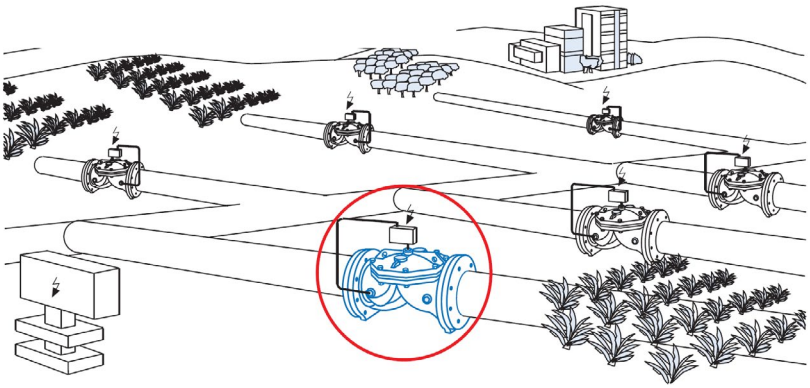

TYPICAL APPLICATIONS

- Water supply systems with medium pressure rating
- Remote operation of hydraulic valve by an electric command
- Irrigation water distribution and field control

FEATURES

- RAF valve two-layered Epoxy-polyester coated
- Self-cleaning screen filter
- 3-W (N.O) plastic solenoid
- Polyethylene plastic tubing
- Power source 24V (AC) 50/60Hz

OPTIONAL FEATURES:

- Rilsan coating
- Positioning indicator
- Large capacity external filter
- 2-W (N.C.) plastic tubing
- Power source - 110V, 220V (AC) & 9V, 12V, 24V (DC)

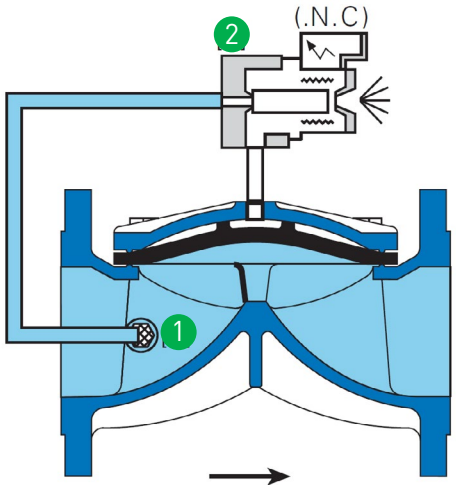

RAF-33 3-W Electric Control Valve (N.O.)

Ref	Name
1	Self-cleaning screen filter
2	3-W (N.C.) plastic solenoid

Nominal Diameter		Max. Flow Rate
mm	inch	m3/h.
25	1	22
40	1.5	25
50	2	41
65	2.5	70
80-65-80	3D	70
80	3	95
100-80-100	4D	95
100	4	177
125	5	177
150-100-150	6D	177

Nominal diameter only, for full dimensions please refer to engineering bulletin.

RAF OG3

Hydraulic Remote Control Valve
3-W Galit Solenoid

The RAF OG3 is a hydraulic valve operated by line pressure. The valve is a 3-W On/Off control valve that can be commanded from a remote location, by a hydraulic control relay - (Galit).
The valve is fully open when the control chamber is disconnected from line pressure and vented into the atmosphere. The 3-W Galit configuration with Raphael's patented diaphragm enables smooth and precise downstream pressure control.
Maximal Nominal Pressure: 10 bar

MARKETS

Green house

Landscape

Mechanised Irrigation

Open field Irrigation

Water Transmission

TECHNICAL DATA

Fluid: raw water or filtered water

Nominal Diameter (DN):
from 25 to 150D mm (1" to 6D")

Available connections: Flanged, Threaded or Grooved

Nominal Pressure (PN):
10 bar

Medium Temperature:
up to 70 °C

Body material: Ductile Iron

Standard Controls: Raphael's 3-W plastic pilot, polyethylene plastic tubing and plastic fittings.

Control with Raphael's 3-W Galit, polyethylene plastic tubing and brass fittings.

APPROVALS

W/O

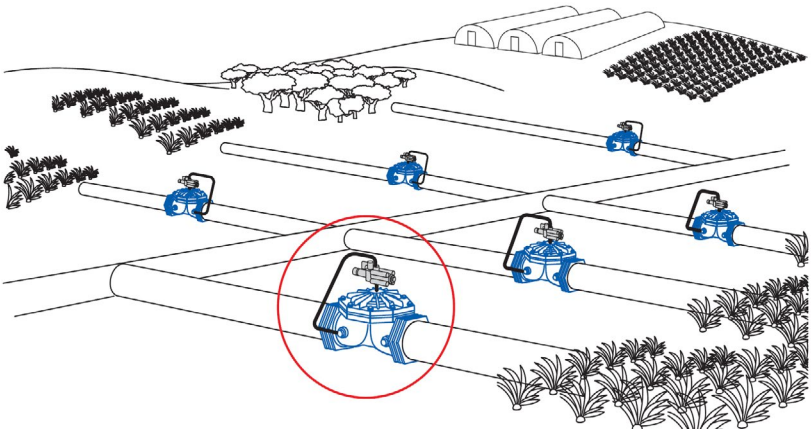

TYPICAL APPLICATIONS

- Water supply systems with medium pressure rating.
- Remote operation control whre opening and closing control unit is installe in a central location and connectred with the field valves by control tubing.
- Use in locations with lightening hazard that damages electric control valves with unprotected solenoid installations.

FEATURES

- RAF valve two-layered Epoxy-polyester coated
- Self-cleaning screen filter
- 3-W Galit solenoid
- Polyethylene plastic tubing

OPTIONAL FEATURES:

- Rilsan internal coating
- Large capacity external filter

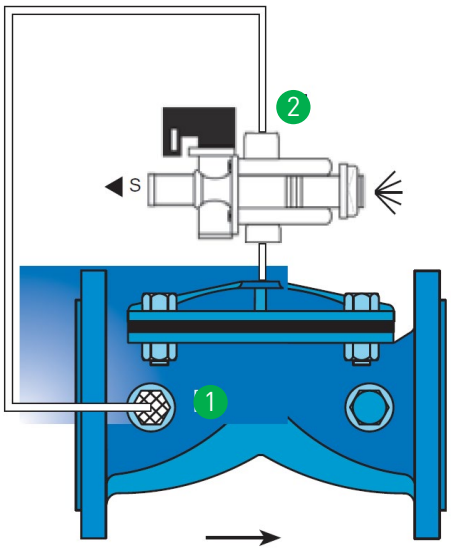

RAF-0G3 3-W Hydraulic Remote Control Valve

Ref	Name
1	Self-cleaning screen filter
2	3-W Galit solenoid

Nominal Diameter		Max. Flow Rate
mm	inch	m3/h.
25	1	22
40	1.5	25
50	2	41
65	2.5	70
80-65-80	3D	70
80	3	95
100-80-100	4D	95
100	4	177
125	5	177
150-100-150	6D	177

Nominal diameter only, for full dimensions please refer to engineering bulletin.

RAF SERIES

RAF 6R

Pressure Reducing Control Valve
3-W Plastic Pilot

The RAF 6R pressure reducing valve is a line pressure hydraulically actuated, 3-W plastic pilot.
The RAF 6R maintains a constant downstream pressure, as set on the 3-W plastic pilot, regardless of flow changes.
The 3-W plastic pilot configuration together with Raphael's patented diaphragm enables smooth and precise downstream pressure control.

Maximal Nominal Pressure: 10 bar

Setting Range: 0.6 to 6 bar

MARKETS

Green house
Landscape
Mechanised Irrigation
Open field Irrigation
Water Transmission

TECHNICAL DATA

Fluid: raw water or filtered water

Nominal Diameter (DN): from 25 to 150D mm (1" to 6D")

Available connections: Flanged, Threaded or Grooved

Nominal Pressure (PN): 10 bar

Medium Temperature: up to 70 °C

Body material: Ductile Iron

Standard Controls: Raphael's 3-W plastic pilot, polyethylene plastic tubing and plastic fittings.

Pilot circuit protected by a self-flushing finger filter, installed in the water inlet of the valve: maintenance free.

APPROVALS

W/O

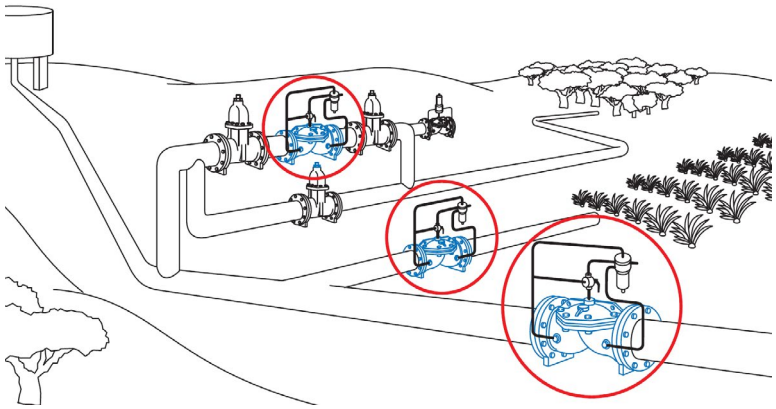

TYPICAL APPLICATIONS

- Irrigation
- Water treatment circulation
- Filtration network

The 3-W plastic pilot has a simple design that provides high corrosion resistance and cost effective prices

ADJUSTMENTS

Downstream pressure adjustment up to 7 bars.

For pressure setting by pilot screw adjustment, refer to available springs list.

FEATURES

- RAF valve two-layered Epoxy-polyester coated
- Self-cleaning screen filter
- 3-W plastic pilot PMR
- 3-W selecting cock valve
- Polyethylene plastic tubing
- Pressure check point

OPTIONAL FEATURES:

- Rilsan internal coating
- Large capacity external filter
- Glycerin filled pressure gauge

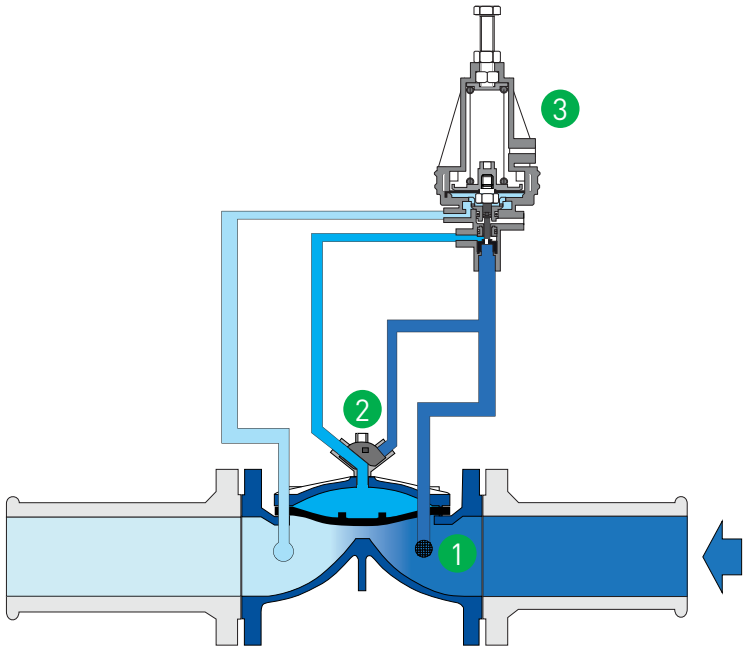

RAF-6R 3-W Pressure Reducing Control Valve (N.O.)

Ref	Name
1	Self-cleaning screen filter
2	3-W Valve
3	3-W plastic pilot PMR

Nominal Diameter		Recommended Flow Rate [m³/h]	
mm	inch	Min.	Max.
25	1	1	22
40	1.5	1	25
50	2	3	41
65	2.5	4	70
80-65-80	3D	4	70
80	3	7	95
100-80-100	4D	7	95
100	4	15	177
125	5D	15	177
150-100-150	6D	15	177

Nominal diameter only, for full dimensions please refer to engineering bulletin.

SPRING SELECTION

Setting range [Bar]	Color of spring
1-6 (standard)	Green
0,6-2,7	Red

RAF 6R-31

Electric Pressure Reducing Control Valve 3-W Plastic Pilot

The RAF 6R-31 is an electric On/Off valve, controlled by a 3-W plastic solenoid valve (N.O.).
When the solenoid is energized the valve opens and acts as a pressure reducing valve, maintaining the preset pressure constant, regardless of the flow-rate or upstream pressure fluctuations.
The 3-W plastic pilot has a spring loaded membrane that can be preset to a desirable downstream pressure.

Maximal Nominal Pressure: 10 bar

Setting Range: 0.6 to 6 bar

MARKETS

Green house

Landscape

Mechanised Irrigation

Open field Irrigation

Water Transmission

TECHNICAL DATA

Fluid: raw water or filtered water

Nominal Diameter (DN): from 25 to 150D mm (1" to 6D")

Available connections: Flanged, Threaded or Grooved

Nominal Pressure (PN): 10 bar

Medium Temperature: up to 70 °C

Body material: Ductile Iron

Standard Controls: Raphael's 3-W plastic pilot, polyethylene plastic tubing and plastic fittings.

Pilot circuit protected by a self-flushing finger filter, installed in the water inlet of the valve: maintenance free.

APPROVALS

W/O

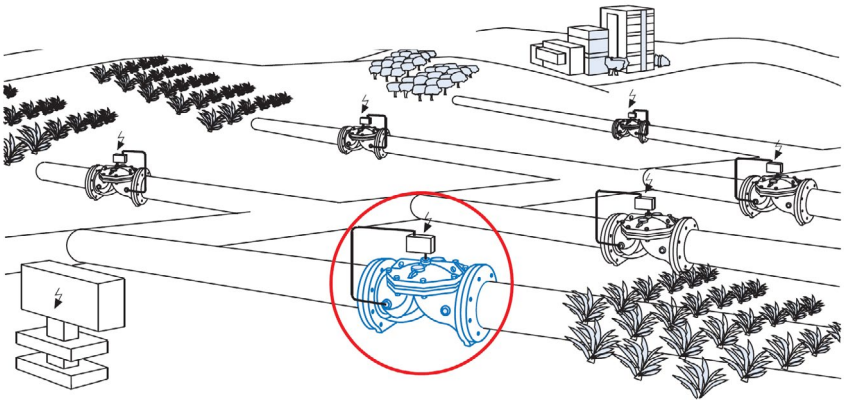

TYPICAL APPLICATIONS

- Irrigation
- Water distribution
- Field control

When downstream pressure should be reduced the valve is commanded to open.

ADJUSTMENTS

Downstream pressure adjustment up to 6 bars.

For pressure setting by pilot screw adjustment, refer to available springs list.

FEATURES

- RAF valve two-layered Epoxy-polyester coated
- Self-cleaning screen filter
- 3-W plastic pilot PMR
- 3-W (N.O) plastic solenoid
- 3-W selecting cock valve
- Polyethylene plastic tubing
- Pressure check point
- Power source 24V (AC) 50/60Hz

OPTIONAL FEATURES:

- Rilsan internal coating
- Large capacity external filter
- Glycerin filled pressure gauge
- Power source - 110V, 220V (AC) & 9V, 12V, 24V (DC)

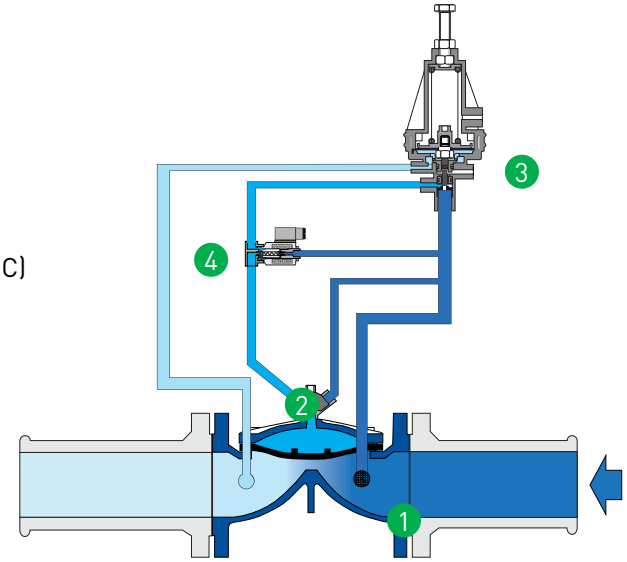

RAF-6R-31 3-W Pressure Reducing Control Valve (N.C.)

Ref	Name
1	Self-cleaning screen filter
2	3-W selecting cock valve
3	3-W plastic pilot PMR
4	3-W (N.O) plastic solenoid

Nominal Diameter		Recommended Flow Rate [m³/h]	
mm	inch	Min.	Max.
25	1	1	22
40	1.5	1	25
50	2	3	41
65	2.5	4	70
80-65-80	3D	4	70
80	3	7	95
100-80-100	4D	7	95
100	4	15	177
125	5D	15	177
150-100-150	6D	15	177

Nominal diameter only, for full dimensions please refer to engineering bulletin.

SPRING SELECTION

Setting range [Bar]	Color of spring
1-6 (standard)	Green
0,6-2,7	Red

RAF SERIES

RAF 8R

Pressure Sustaining Control Valve
3-W Plastic Pilot

The RAF 8R pressure sustaining control valve maintains a minimum upstream pressure, as set on the 3-W pressure sustaining plastic pilot, regardless of flow changes.
The RAF 8R will fully open should upstream pressure exceed 3-W pilot set pressure.
The 3-W pilot configuration together with Raphael's patented diaphragm enables smooth and precise upstream pressure control.

Maximal Nominal Pressure: 10 bar

Setting Range: 0,8 to 7 bar

MARKETS

Green house
Landscape
Mechanised Irrigation
Open field Irrigation
Water Transmission

TECHNICAL DATA

Fluid: raw water or filtered water

Nominal Diameter (DN): from 25 to 150D mm (1" to 6D")

Available connections: Flanged, Threaded or Grooved

Nominal Pressure (PN): 10 bar

Medium Temperature: up to 70 °C

Body material: Ductile Iron

Standard Controls: Raphael's 3-W plastic pilot, polyethylene plastic tubing and plastic fittings.

Pilot circuit protected by a self-flushing finger filter, installed in the water inlet of the valve: maintenance free.

APPROVALS

W/O

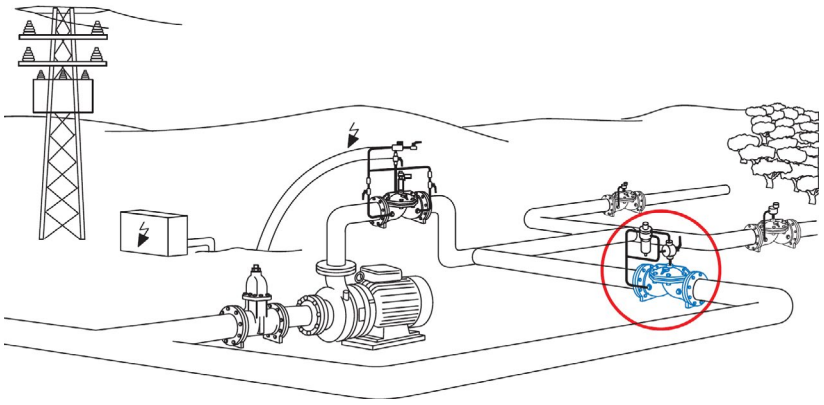

TYPICAL APPLICATIONS

- Irrigation
- Water distribution
- Field control

Use the valve to maintain a constante upstream pressure and to avoid an undesirable high pressure.

ADJUSTMENTS

Minimum upstream pressure adjustment up to 7 bars.

For pressure setting by pilot screw adjustment, refer to available springs list.

FEATURES

- RAF valve two-layered Epoxy-polyester coated
- Self-cleaning screen filter
- 3-W plastic pilot PMSR
- Polyethylene plastic tubing
- 3-W selecting cock valve
- Pressure check point

OPTIONAL FEATURES:

- Rilsan internal coating
- Large capacity external filter
- Glycerin filled pressure gauge

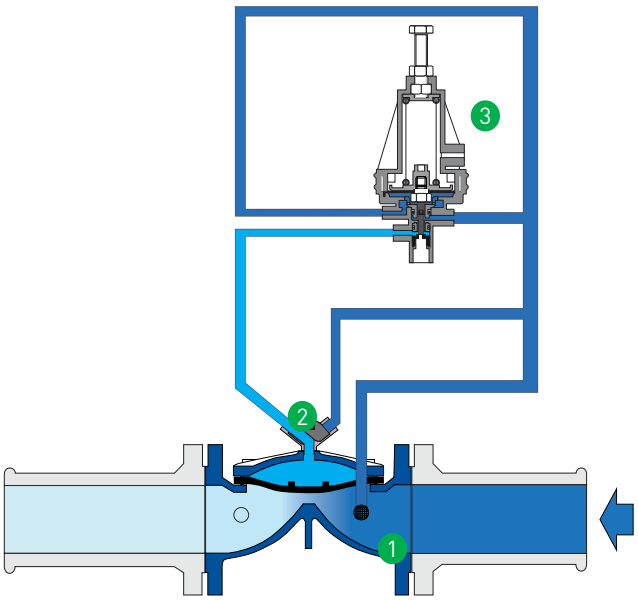

RAF-8R 3-W Pressure Sustaining Control Valve

Ref	Name
1	Self-cleaning screen filter
2	3-W selecting cock valve
3	3-W plastic pilot PMSR

Nominal Diameter		Max. Flow Rate
mm	inch	m^3/h
25	1	22
40	1.5	25
50	2	41
65	2.5	70
80-65-80	3D	70
80	3	95
100-80-100	4D	95
100	4	177
125	5D	177
150-100-150	6D	177

Nominal diameter only, for full dimensions please refer to engineering bulletin.

SPRING SELECTION

Setting range [Bar]	Color of spring
1-7 (standard)	Green
0,8-3	Red

RAF 8R-31

Electric Pressure Sustaining Control Valve 3-W Plastic Pilot

The RAF 8R-31 is a Normally Closed (N.C) pressure sustaining valve.
The RAF 8R-31 is an electric On/Off valve, controlled by a 3-W plastic solenoid valve. When the solenoid is energized the valve opens and performs as a pressure sustaining valve, maintaining the set pressure constant regardless of flow-rate or pressure fluctuations.
The 3-W plastic pilot can be preset to a desirable minimum upstream pressure.
The 3-W plastic pilot and plastic solenoid together with Raphael's patented diaphragm enables smooth and precise control.
Maximal Nominal Pressure: 10 bar
Setting Range: 0,8 to 7 bar

MARKETS

Green house
Landscape
Mechanised Irrigation
Open field Irrigation
Water Transmission

TECHNICAL DATA

Fluid: raw water or filtered water

Nominal Diameter (DN): from 25 to 150D mm (1" to 6D")

Available connections: Flanged, Threaded or Grooved

Nominal Pressure (PN): 10 bar

Medium Temperature: up to 70 °C

Body material: Ductile Iron

Standard Controls: Raphael's 3-W plastic pilot, polyethylene plastic tubing and plastic fittings.

Pilot circuit protected by a self-flushing finger filter, installed in the water inlet of the valve: maintenance free.

APPROVALS

W/O

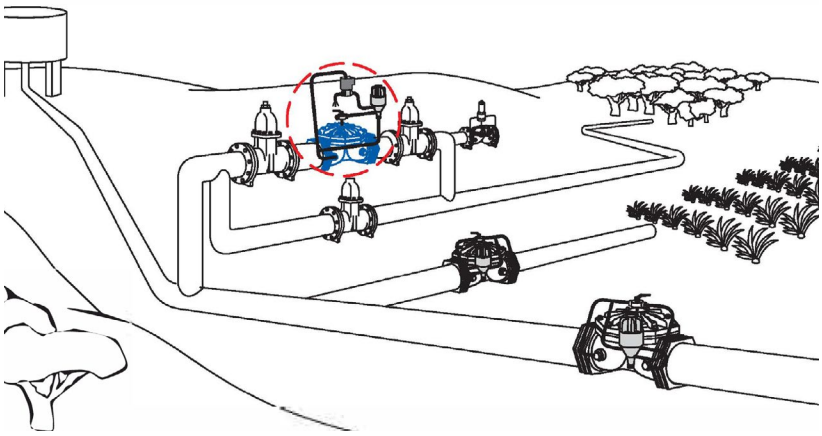

TYPICAL APPLICATIONS

- Irrigation
- Water distribution
- Field control

Use the valve to maintain a constante upstream pressure and to avoid an undesirable high pressure.

ADJUSTMENTS

Minimum upstream pressure adjustment up to 7 bars.

For pressure setting by pilot screw adjustment, refer to available springs list.

FEATURES

- RAF valve two-layered Epoxy-polyester coated
- Self-cleaning screen filter
- 3-W plastic pilot PMSR
- 3-W (N.O) plastic solenoid
- Polyethylene plastic tubing
- 3-W selecting cock valve
- Pressure check point
- Power source 24V (AC) 50/60Hz

OPTIONAL FEATURES:

- Rilsan internal coating
- Large capacity external filter
- Glycerin filled pressure gauge
- Power source - 110V, 220V (AC) & 9V, 12V, 24V (DC)

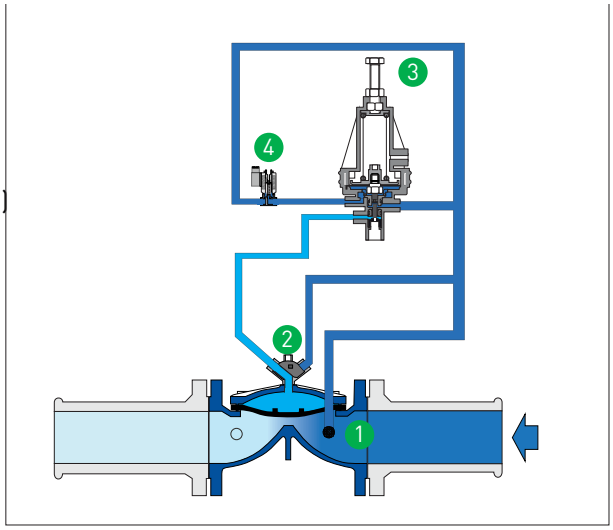

RAF-8R-31 3-W Electric Pressure Sustaining Control Valve

Ref	Name
1	Self-cleaning screen filter
2	3-W selecting cock valve
3	3-W plastic pilot PMSR
4	3-W (N.O) plastic solenoid

Nominal Diameter		Max. Flow Rate
mm	inch	m^3/h
25	1	22
40	1.5	25
50	2	41
65	2.5	70
80-65-80	3D	70
80	3	95
100-80-100	4D	95
100	4	177
125	5D	177
150-100-150	6D	177

Nominal diameter only, for full dimensions please refer to engineering bulletin.

SPRING SELECTION

Setting range [Bar]	Color of spring
1-7 (standard)	Green
0,8-3	Red

RAF SERIES

RAF 68R

Pressure Reducing & Sustaining Control Valve 3-W Plastic Pilot

The RAF 68R maintains a minimum upstream pressure, as set on the 3-W pressure sustaining plastic pilot and a maximum downstream as set on the 3-W pressure reducing plastic pilot. The minimum upstream and the maximum downstream pressure are maintained regardless of flow changes. The 3-W pilot configuration together with Raphael's patented diaphragm enables smooth and precise pressure control.

Maximal Nominal Pressure: 10 bar

MARKETS

Green house

Landscape

Mechanised Irrigation

Open field Irrigation

Water Transmission

TECHNICAL DATA

Fluid: raw water or filtered water

Nominal Diameter (DN): from 25 to 150D mm (1'' to 6D'')

Available connections: Flanged, Threaded or Grooved

Nominal Pressure (PN): 10 bar

Medium Temperature: up to 70 °C

Body material: Ductile Iron

Standard Controls: Raphael's 3-W plastic pilot, polyethylene plastic tubing and plastic fittings.

Pilot circuit protected by a self-flushing finger filter, installed in the water inlet of the valve: maintenance free.

APPROVALS

W/O

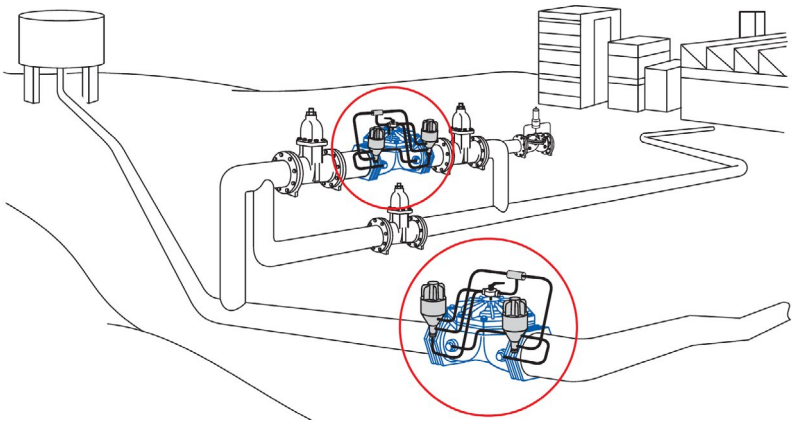

TYPICAL APPLICATIONS

- Define two pressure zones along a supply line
- Irrigation water network

ADJUSTMENTS

Minimum upstream and maximum downstream pressure adjustment up to 7 bars.

For pressure setting by pilot screw adjustment,

please refer to available springs list

FEATURES

- RAF valve two-layered Epoxy-polyester coated
- Self-cleaning screen filter
- 3-W plastic pilot PMSR (configured as sustaining)
  3-W plastic pilot PMR (configured as reducing)
- 3-W selecting cock valve
- Polyethylene plastic tubing
- Pressure check point

OPTIONAL FEATURES:

- Rilsan internal coating
- Large capacity external filter
  Glycerin filled pressure gauge
-

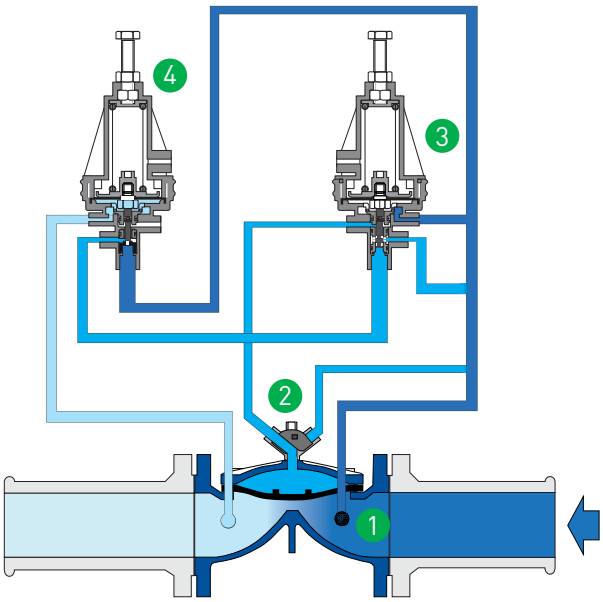

RAF-68R 3-W Pressure Reducing & Sustaining Control Valve

Ref	Name
1	Self-cleaning screen filter
2	3-W selecting cock valve
3	3-W plastic pilot PMSR
4	3-W plastic pilot PMR

Nominal Diameter		Recommended Flow Rate [m³/h]	
mm	inch	Min.	Max.
25	1	1	22
40	1.5	1	25
50	2	3	41
65	2.5	4	70
80-65-80	3D	4	70
80	3	7	95
100-80-100	4D	7	95
100	4	15	177
125	5D	15	177
150-100-150	6D	15	177

Nominal diameter only, for full dimensions please refer to engineering bulletin.

SPRING SELECTION
Reducing Mode

Setting range [Bar]	Color of spring
1-6 (standard)	Green
0,6-2,7	Red

SPRING SELECTION
Sustaining Mode

Setting range [Bar]	Color of spring
1-7 (standard)	Green
0.8-3	Red

RAF SERIES

RAF 7R

Flow Rate Control Valve

3-W Plastic Pilot

The RAF 7R flow rate control valve is line pressure hydraulically actuated, 3-W plastic pilot. Normally the valve is partly open to allow constante flow rate. The head loss across the orifice is proportional to the flow rate.
The RAF 7R maintains a maximum preset flow rate, as set on the 3-W flow rate pilot, and calibrated orifice regardless of pressure changes.
The 3-W pilot configuration together with Raphael's patented diaphragm enables smooth and precise flow rate control.

Maximal Nominal Pressure: 10 bar

MARKETS

Green house

Landscape

Mechanised Irrigation

Open field Irrigation

Water Transmission

TECHNICAL DATA

Fluid: raw water or filtered water

Nominal Diameter (DN): from 25 to 150D mm (1" to 6D")

Available connections: Flanged, Threaded or Grooved

Nominal Pressure (PN): 10 bar

Medium Temperature: up to 70 °C

Body material: Ductile Iron

Standard Controls: Raphael's 3-W plastic pilot, polyethylene plastic tubing and plastic fittings.

Pilot circuit protected by a self-flushing finger filter, installed in the water inlet of the valve: maintenance free.

APPROVALS

W/O

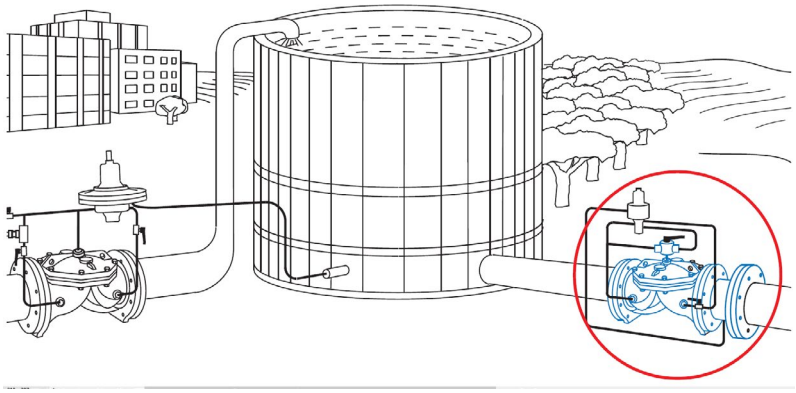

TYPICAL APPLICATIONS

- Irrigation water distribution and field control
- Eliminate excessive pumping or to limit the water demand
- Cost effective option for low pressure agricultural supply

FEATURES

- RAF valve two-layered Epoxy-polyester coated
- Self-cleaning screen filter
- 3-W plastic pilot PMF
- Polyethylene plastic tubing
- 3-W selecting cock valve
- Orifice plate

OPTIONAL FEATURES:

- Rilsan internal coating
- Large capacity external filter
- 3-W metal pilot P-103

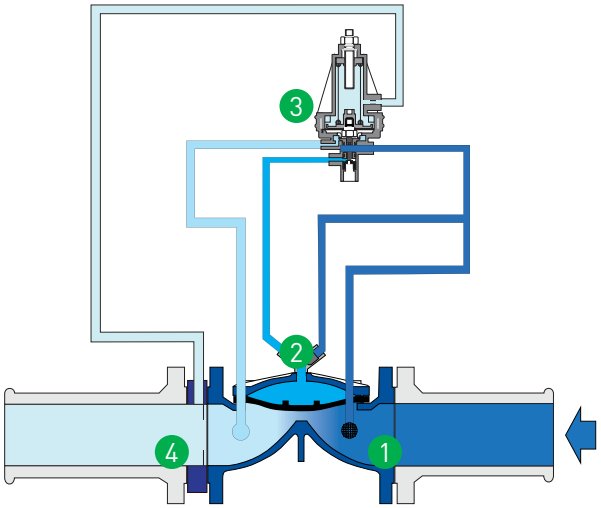

RAF-R 3-W Flow Rate Control Valve

Ref	Name
1	Self-cleaning screen filter
2	3-W selecting cock valve
3	3-W flow control plastic pilot PMF
4	Calibrated orifice plate

Nominal Diameter		Recommended Flow Rate [m^3/h]	
mm	inch	Min.	Max.
25	1	3	22
40	1.5	3	25
50	2	5	41
65	2.5	7	70
80-65-80	3D	7	70
80	3	7	95
100-80-100	4D	15	95
100	4	15	177
125	5D	15	177
150-100-150	6D	15	177

Nominal diameter only, for full dimensions please refer to engineering bulletin.

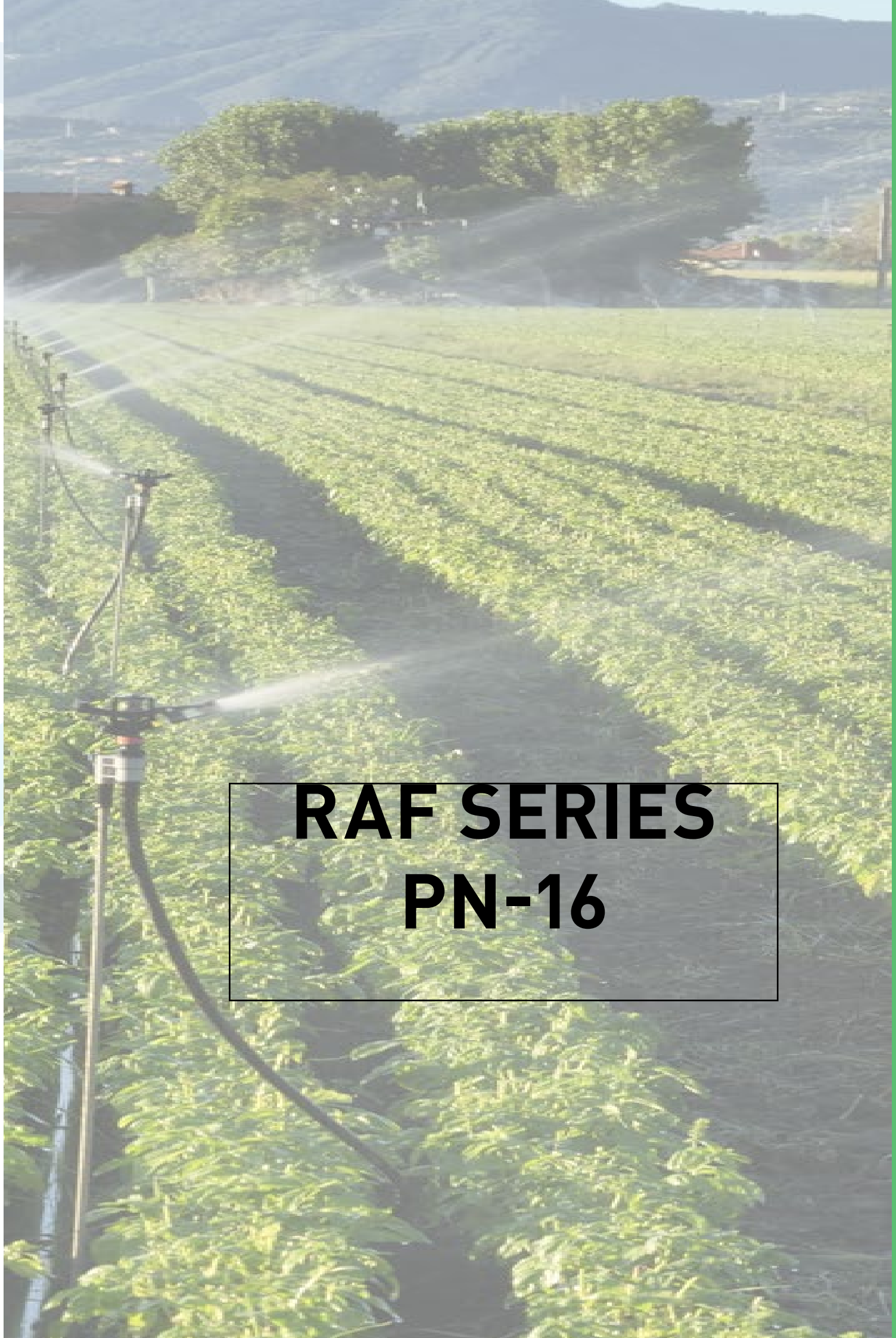

RAF SERIES
PN-16

RAF SERIES

RAF 31

Electric Control Valve (N.C.)

3-W Metal Solenoid

The RAF 31 electric valve is a Normally Closed (N.C) line pressure hydraulically actuated.
The 3-W electric solenoid valve changes positions:
The RAF 31 (N.C) opens when 3-W solenoid valve is energized.
The RAF 31 (N.C) shuts off when 3-W solenoid valve is de-energized.
The 3-W electric solenoid valve configuration together with Raphael's patented diaphragm enables smooth opening and surge free shut-off.

Maximal Nominal Pressure: 16 bar

Setting Range: 0.6 to 6 bar

MARKETS

Green house

Landscape

Mechanised Irrigation

Open field Irrigation

Water Transmission

TECHNICAL DATA

Fluid: raw water or filtered water

Nominal Diameter (DN): from 25 to 350 mm (1" to 14")

Available connections: Flanged, Threaded or Grooved

Nominal Pressure (PN): 16 bar

Medium Temperature: up to 70 °C

Body material: Ductile Iron

Standard Controls: Electric valve controls with Raphael's 3-W solenoid, activated by any voltage, reinforced plastic tubing and brass fitings.

APPROVALS

W/O

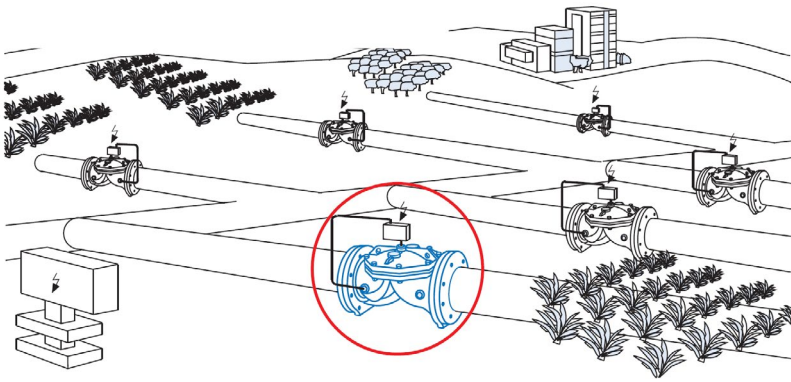

TYPICAL APPLICATIONS

- Water supply systems with medium pressure rating
- Remote operation of hydraulic valve by an electric command
- Irrigation water distribution and field control

FEATURES

- RAF valve two-layered Epoxy-polyester coated
- Self-cleaning screen filter
- 3-W (N.O.) metal solenoid
- Reinforced plastic tubing
- Power source - 24V (AC) 50/60 Hz

OPTIONAL FEATURES:

- Rilsan internal coating
- Large capacity external filter
- 2-W (N.O.) metal solenoid
- Copper and stainless steel tubing
- Power source - 110V, 220V (AC) & 9 V, 12V, 24V (DC)

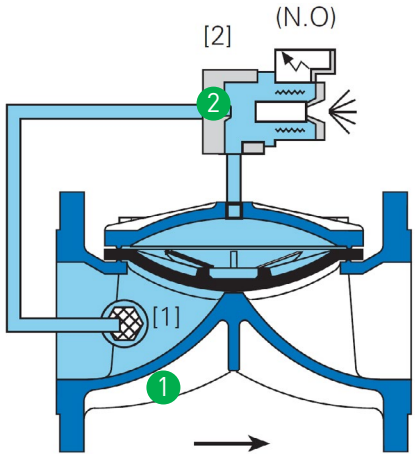

RAF-31 3-W Electric Metal Solenoid Control Valve (N.C.)

Ref	Name
1	Self-cleaning screen filter
2	3W (N.O.) metal solenoid

Nominal Diameter		Recommended Flow Rate [m^3/h]	
mm	inch	Min.	Max.
25	1		20
40	1.5		25
50	2		45
65	2.5		60
80D	3D		70
80	3		90
100D	4D		90
100	4		150
125D	5D		150
150D	6D		150
150	6		320
200	8		550
250	10		950
300	12		1200
350	14		1200

Nominal diameter only, for full dimensions please refer to engineering bulletin.

RAF 33

Electric Control Valve (N.O.)
3-W Metal Solenoid

The RAF 33 electric valve is a Normally Open (N.O) line pressure hydraulically actuated.
The 3-W electric solenoid valve changes positions: The RAF 33 (N.O) opens when the 3-W solenoid valve is de-energized. The RAF 33 (N.O) shuts-off when 3-W solenoid valve is energized.
The 3-W electric solenoid valve configuration together with Raphael's patented diaphragm enables smooth opening and surge free shut-off.

Maximal Nominal Pressure: 16 bar

Setting Range: 0.6 to 6 bar

MARKETS

Green house

Landscape

Mechanised Irrigation

Open field Irrigation

Water Transmission

TECHNICAL DATA

Fluid: raw water or filtered water

Nominal Diameter (DN): from 25 to 350 mm (1" to 14")

Available connections: Flanged, Threaded or Grooved

Nominal Pressure (PN): 16 bar

Medium Temperature: up to 70 °C

Body material: Ductile Iron

Standard Controls: Electric valve controls with Raphael's 3-W solenoid, activated by any voltage, reinforced plastic tubing and brass fitings.

APPROVALS

W/O

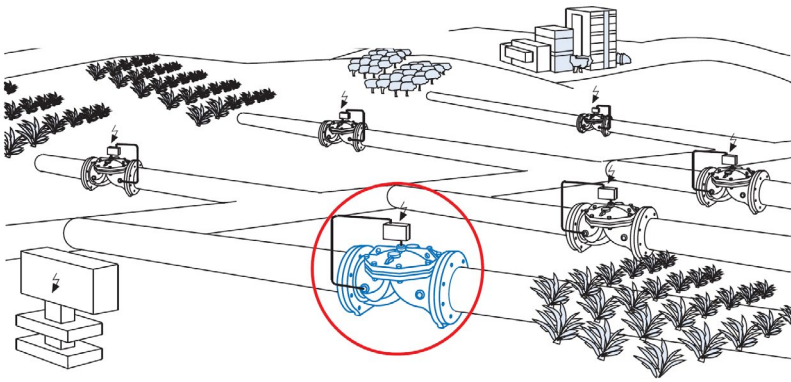

TYPICAL APPLICATIONS

- Water supply systems with medium pressure rating
- Remote operation of hydraulic valve by an electric command
- Irrigation water distribution and field control

FEATURES

- RAF valve two-layered Epoxy-polyester coated
- Self-cleaning screen filter
- 3-W (N.C.) metal solenoid
- Reinforced plastic tubing
- Power source - 24V (AC) 50/60 Hz

OPTIONAL FEATURES:

- Rilsan internal coating
- Large capacity external filter
- 2-W (N.C.) metal solenoid
- Copper and stainless steel tubing
- Power source - 110V, 220V (AC) & 9 V, 12V, 24V (DC)

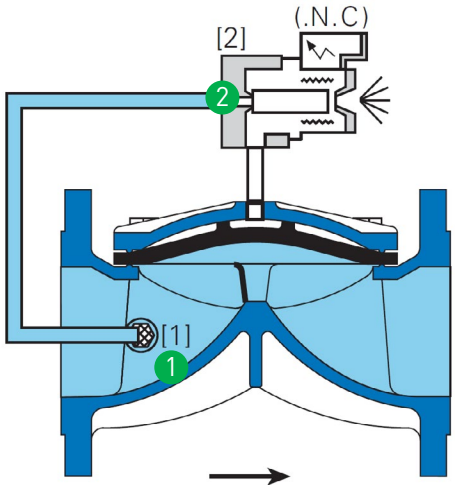

RAF-33 3-W Electric Metal Solenoid Control Valve (N.O.)

Ref	Name
1	Self-cleaning screen filter
2	3W (N.C.) metal solenoid

Nominal Diameter		Recommended Flow Rate [m^3/h]	
mm	inch	Min.	Max.
25	1		20
40	1.5		25
50	2		45
65	2.5		60
80D	3D		70
80	3		90
100D	4D		90
100	4		150
125D	5D		150
150D	6D		150
150	6		320
200	8		550
250	10		950
300	12		1200
350	14		1200

Nominal diameter only, for full dimensions please refer to engineering bulletin.

RAF SERIES

RAF 10

Float Level Control Valve
2-W Float Pilot

The RAF 10 float level control valve is activated by line pressure in any situation that maximum water level should be maintained.
The RAF 10 stays open as long as the water level in the reservoir is below the maximum preset level. As the water level rises and lifts the float, the valve gradually closes.
When the water level is low, the control chamber of the valve is drained through the vent, the valve opens and the reservoir is being filled.

Maximal Nominal Pressure: 16 bar

Setting Range: 0.6 to 6 bar

MARKETS

Green house · Landscape · Mechanised Irrigation · Open field Irrigation · Water Transmission

TECHNICAL DATA

Fluid: raw water or filtered water

Nominal Diameter (DN):
from 25 to 350 mm (1'' to 14")

Available connections: Flanged, Threaded or Grooved

Nominal Pressure (PN):
16 bar

Medium Temperature:
up to 70 °C

Body material: Ductile Iron

Standard Controls: Foat level control valve controls with Raphael's 2-W float pilot.
The pilot vent is opened or closed according to the float level.

APPROVALS

W/O

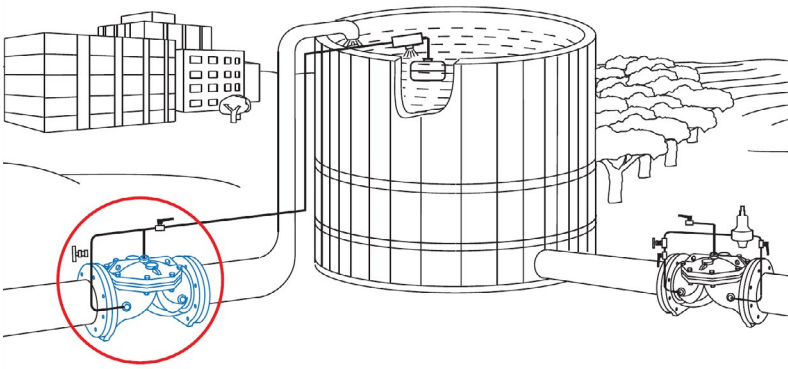

TYPICAL APPLICATIONS

- Best fit in remotes sites
- Maintain a maximum preset water level in a reservoir or water tank in a simple and economic way.
- The RAF10 can be located above the water level
- Due to its simple design, it is maintenance free
- There is no need for energy other than line pressure.

FEATURES

- RAF valve two-layered Epoxy-polyester coated
- Self-cleaning screen filter
- 2-W brass pilot P-10
- Brass float arm
- Stainless steel float
- 2-W selecting cock valve
- Needle valve
- Reinfor

OPTIONAL FEATURES:

- Rilsan internal coating
- Large capacity external filter
- Stainless steel pilot P-10
- Copper and stainless steel tubing

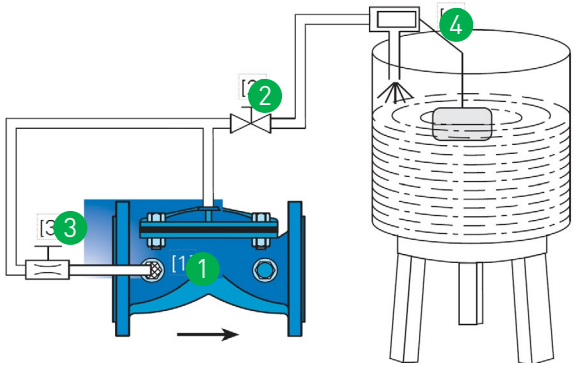

RAF-10 2-W Float Level Control Valve

Ref	Name
1	Self-cleaning screen filter
2	Cock valve
3	Needle valve
4	Float pilot assembly

Nominal Diameter		Recommended Flow Rate [m³/h]	
mm	inch	Min.	Max.
25	1	3	22
40	1.5	3	25
50	2	5	45
65	2.5	5	70
80D	3D	5	70
80	3	5	90
100D	4D	5	90
100	4	10	150
125D	5D	10	150
150D	6D	10	150
150	6	15	320
200	8	40	550
250	10	80	950
300	12	100	1200
350	14	100	1200

Nominal diameter only, for full dimensions please refer to engineering bulletin.

RAF SERIES

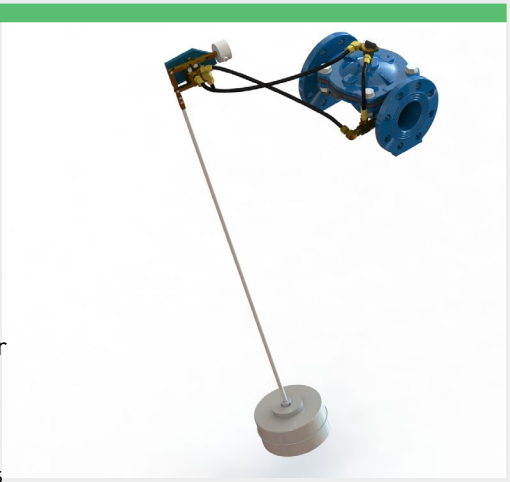

RAF 13

Bi-Level Float Control Valve

3-W Float Pilot

The RAF 13 is activated by line pressure and controls by a float pilot.
The valve opens at a low preset water level and closes at a high preset water level. Therefore, there is no need for energy other than line pressure.
The RAF 13 allows filling and draining of a reservoir or a water tank in a level range that can be easily changed.
The RAF 13 stays in its last position (fully open or fully close) as long as the water level is in between minimum and maximum preset levels.

Maximal Nominal Pressure: 16 bar

Setting Range: 0.6 to 6 bar

MARKETS

Green house

Landscape

Mechanised Irrigation

Open field Irrigation

Water Transmission

TECHNICAL DATA

Fluid: raw water or filtered water

Nominal Diameter (DN):
from 25 to 350 mm (1'' to 14")

Available connections: Flanged, Threaded or Grooved

Nominal Pressure (PN):
16 bar

Medium Temperature:
up to 70 °C

Body material: Ductile Iron

Standard Controls: Foat level control valve controls with Raphael's 3-W float pilot.
The vertical water level changes are conveyed to the float.

APPROVALS

W/O

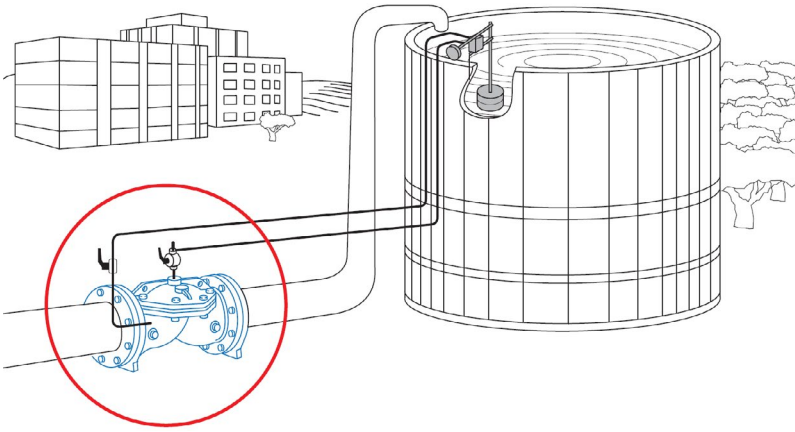

TYPICAL APPLICATIONS

- Control filling of reservoirs and water tanks, in any situation taht water level is controlled.
- Best fit where On/Off non-modulating valve operation is essential. Due to its simple design,it is virtually maintenance free.

FEATURES

- RAF valve two-layered Epoxy-polyester coated
- Self-cleaning screen filter
- 2-W brass pilot P-10
- Brass float arm
- Stainless steel float
- 2-W selecting cock valve
- Needle valve
- Reinfor

OPTIONAL FEATURES:

- Rilsan internal coating
- Large capacity external filter
- Stainless steel pilot P-10
- Copper and stainless steel tubing

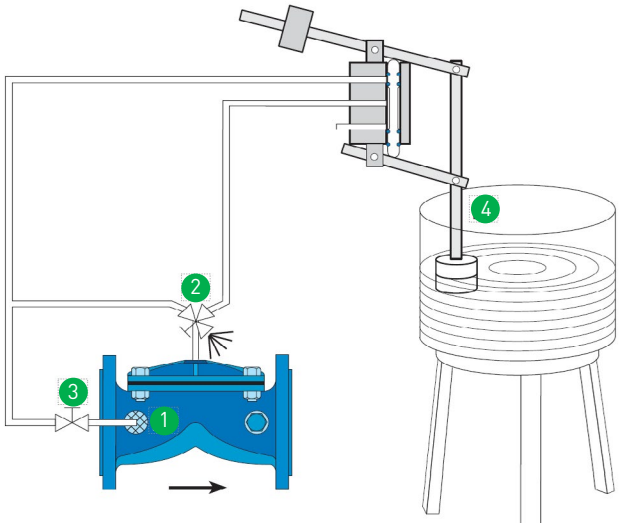

RAF-10 2-W Bi-Level Float Control Valve

Ref	Name
1	Self-cleaning screen filter
2	3-W valve
3	Cock valve
4	3-W Float pilot assembly

Nominal Diameter		Recommended Flow Rate [m³/h]	
mm	inch	Min.	Max.
25	1	20	28
40	1.5	25	35
50	2	45	60
65	2.5	60	80
80D	3D	70	100
80	3	90	120
100D	4D	90	120
100	4	150	180
125D	5D	150	200
150D	6D	150	200
150	6	320	400
200	8	550	750
250	10	950	1150
300	12	1200	1700
350	14	1400	1700

Nominal diameter only, for full dimensions please refer to engineering bulletin.

RAF SERIES

RAF 1031

Electric Float Control Valve

3-W Metal Solenoid

The RAF 1031 is a Normally Closed (N.C) electric float control valve, activated by line pressure. When the water level drops below the float, the electric circuit is switched on and opens the valve through a solenoid valve. As the rising water reaches the maximum level, the solenoid is de-energized and the RAF 1031 closes.

Maximal Nominal Pressure: 16 bar

Setting Range: 0.6 to 6 bar

MARKETS

Green house

Landscape

Mechanised Irrigation

Open field Irrigation

Water Transmission

TECHNICAL DATA

Fluid: raw water or filtered water

Nominal Diameter (DN): from 25 to 350 mm (1'' to 14")

Available connections: Flanged, Threaded or Grooved

Nominal Pressure (PN): 16 bar

Medium Temperature: up to 70 °C

Body material: Ductile Iron

Standard Controls: RAF 1031 electric float control valve controls with Raphael's 3-W solenoid valve. An electric circuit is switched On/ Off by a dry contact float hanging over the water surface.
In case of power failure, the RAF 1031 remains tight-close to avoid an uncontrolled spill of water.

APPROVALS

W/O

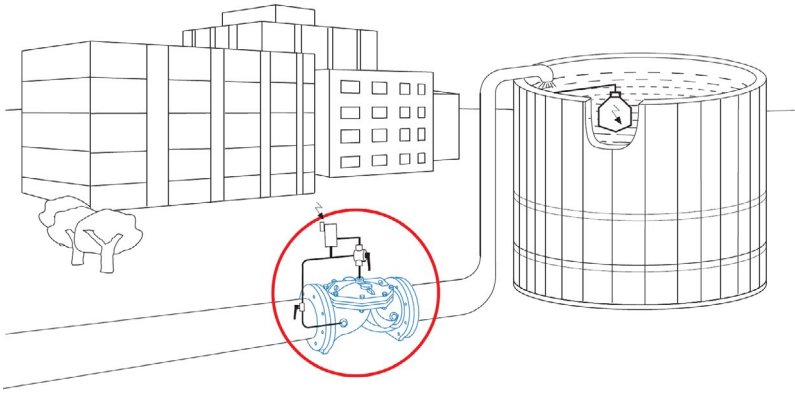

TYPICAL APPLICATIONS

- Water level control.
- Best for remote or local control of reservoirs and water tanks level control when electricity is available.
- The valve can be located also above the upper water level of the tank

FEATURES

- RAF valve two-layered Epoxy-polyester coated
- Self-cleaning screen filter
- 3-W (N.O.) metal solenoid
- Electric float cable (w/10m)
- 3-W selecting cock valve
- Reinforced plastic tubing
- Power source 24V (AC) 50/60 Hz

OPTIONAL FEATURES:

- Rilsan internal coating
- Large capacity external filter
- Copper and stainless steel tubing
- Power source 110V, 220V, (AC) & 9V,12V, 24V, (DC)

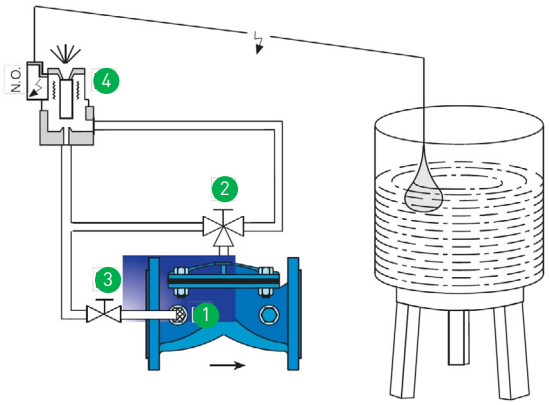

RAF-1031 Electric Float Control Valve

Ref	Name
1	Self-cleaning screen filter
2	3-W valve
3	Cock valve
4	3-W (N.O.) metal solenoid

Nominal Diameter		Recommended Flow Rate [m^3/h]	
mm	inch	Min.	Max.
25	1	20	28
40	1.5	25	35
50	2	45	60
65	2.5	60	80
80D	3D	70	100
80	3	90	120
100D	4D	90	120
100	4	150	180
125D	5D	150	200
150D	6D	150	200
150	6	320	400
200	8	550	750
250	10	950	1150
300	12	1200	1700
350	14	1400	1700

Nominal diameter only, for full dimensions please refer to engineering bulletin.

RAF SERIES

RAF 62

Pressure Reducing Control Valve
2-W Metal Pilot

The RAF 62 pressure reducing valve is line pressure hydraulically actuated, 2-W pilot.
The 2-W pressure reducing pilot valve has a spring-loaded membrane, downstream sensitive and can be preset to a desirable downstream pressure.
The RAF 62 maintains a constant downstream pressure, as set on the 2-W pressure reducing pilot, regardless of flow changes.
The 2-W pilot configuration together with Raphael's patented diaphragm enable smooth and precise downstream pressure control.

Maximal Nominal Pressure: 16 bar

Setting Range: 0.6 to 6 bar

MARKETS

Green house
Landscape
Mechanised Irrigation
Open field Irrigation
Water Transmission

TECHNICAL DATA

Fluid: raw water or filtered water

Nominal Diameter (DN): from 25 to 150 mm (1'' to 6D'')

Available connections: Flanged, Threaded or Grooved

Nominal Pressure (PN): 16 bar

Medium Temperature: up to 70 °C

Body material: Ductile Iron

Standard Controls: Pressure reducing valve controls with Raphael's 2-W pressure reducing brass pilot P-162 reinforced plastic tubing and brass fittings.

APPROVALS

W/O

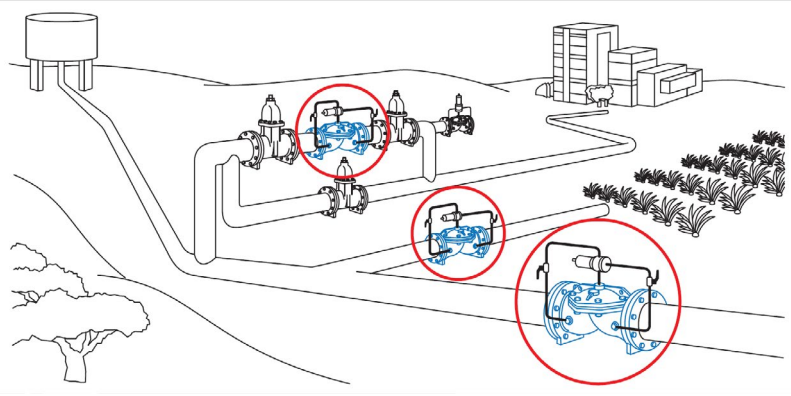

TYPICAL APPLICATIONS

- Water supply systems with medium pressure rating.
- Irrigation water distribution and field control.

ADJUSTMENTS

Downstream pressure adjustment up to 16 bars.

For pressure setting by pilot screw adjustment, please refer to available springs list.

FEATURES

- RAF valve two-layered Epoxy-polyester coated
- Self-cleaning screen filter
- 2-W pilot P-162
- Built-in needle valve
- Reinforced plastic tubing
- Glycerin filled pressure gauge

OPTIONAL FEATURES:

- Rilsan internal coating
- Large capacity external filter
- Stainless steel pilot with built-in needle valve
- Copper and stainless steel tubing
- Pressure check point

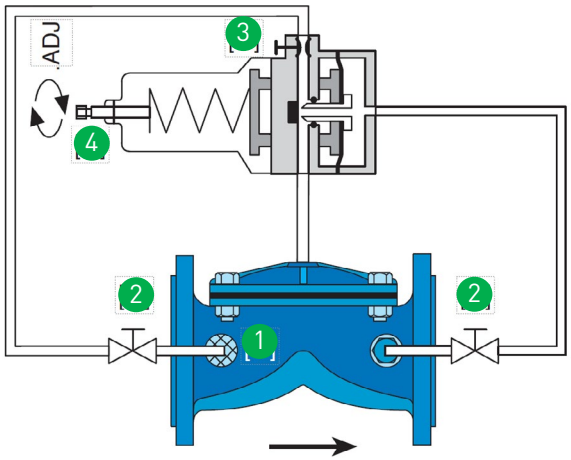

RAF-62 2-W Pressure Reducing Control Valve

Ref	Name
1	Self-cleaning screen filter
2	Cock valve
3	Built-in needle valve
4	2-W pilot P-162

Nominal Diameter		Recommended Flow Rate [m³/h]	
mm	inch	Min.	Max.
25	1	1	20
40	1.5	1	25
50	2	3	45
65	2.5	1	60
80D	3D	5	70
80	3	5	90
100D	4D	5	90
100	4	15	150
125D	5D	15	150
150D	6D	15	150

Nominal diameter only, for full dimensions please refer to engineering bulletin.

SPRING SELECTION

Pilot P-162

Setting range [Bar]	Color of spring
2-12 (standard)	Green
0.5-8	Red
2-16	Yellow

RAF SERIES

RAF 60

Pressure Reducing Control Valve

2-W Metal Pilot

The RAF 60 pressure reducing valve is line pressure hydraulically actuated, 2-W pilot. The RAF 60 maintains constant downstream pressure, as set on the 2-W pressure reducing pilot, regardless of flow changes.
The 2-W pilot configuration together with Raphael's patented diaphragm enable smooth and precise downstream pressure control.

Maximal Nominal Pressure: 16 bar

Setting Range: 0.6 to 6 bar

MARKETS

Green house

Landscape

Mechanised Irrigation

Open field Irrigation

Water Transmission

TECHNICAL DATA

Fluid: raw water or filtered water

Nominal Diameter (DN): from 150 to 350 mm (6'' to 14")

Available connections: Flanged, Threaded or Grooved

Nominal Pressure (PN): 16 bar

Medium Temperature: up to 70 °C

Body material: Ductile Iron

Standard Controls: RAF 60 pressure reducing valve controls with Raphael's 2-W pressure reducing brass pilot P-161, reinforced plastic tubing and brass fittings.

APPROVALS

W/O

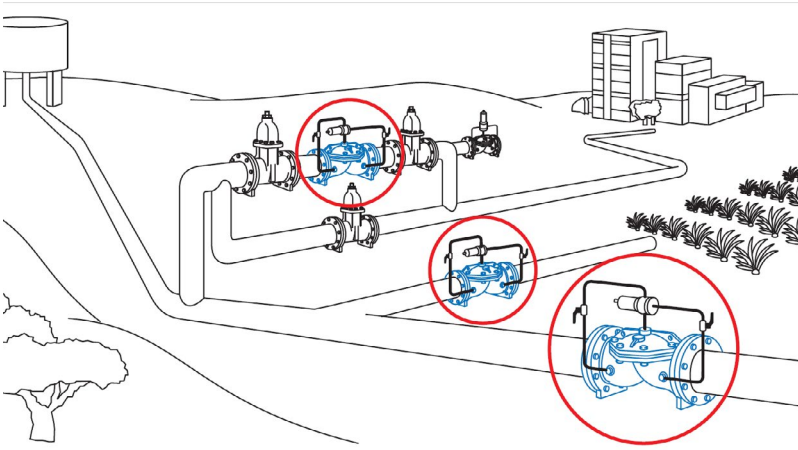

TYPICAL APPLICATIONS

- Water supply systems with medium pressure rating.
- Irrigation water distribution and field control.

ADJUSTMENTS

Downstream pressure adjustment up to 16 bars.

For pressure setting by pilot screw adjustment, please refer to available springs list.

FEATURES

- RAF valve two-layered Epoxy-polyester coated
- Self-cleaning screen filter
- 2-W pilot P-161
- Needle valve
- Reinforced plastic tubing
- Glycerin filled pressure gauge

OPTIONAL FEATURES:

- Rilsan internal coating
- Large capacity external filter
- Stainless steel pilot and needle valve
- Copper and stainless steel tubing
- Pressure check point

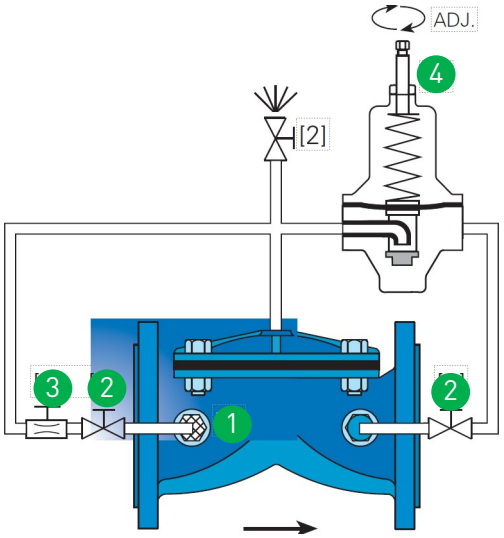

RAF-62 2-W Pressure Reducing Control Valve

Ref	Name
1	Self-cleaning screen filter
2	Cock valve
3	Needle valve
4	2-W pilot P-161

Nominal Diameter		Recommended Flow Rate [m^3/h]	
mm	inch	Min.	Max.
150	6	15	320
200	8	40	550
250	10	80	950
300	12	100	1200
350	14	100	1200

Nominal diameter only, for full dimensions please refer to engineering bulletin.

SPRING SELECTION

Pilot P-161

Setting range [Bar]	Color of spring
2-10 (standard)	Green
0.5-4	Blue
0.5-6	Red
2-16	Yellow

RAF SERIES

RAF 63B

Pressure Reducing Control Valve

3-W Metal Pilot

The RAF 63B 3-W pressure reducing valve is line pressure hydraulically actuated, 3-W pilot.
The RAF 63B maintains a constant downstream pressure, as set on the 3-W reducing pilot, regardless of flow changes. The 3-W pilot configuration together with Raphael's patented diaphragm enable smooth and precise downstream pressure control.

Maximal Nominal Pressure: 16 bar

Setting Range: 0.6 to 6 bar

MARKETS

Green house

Landscape

Mechanised Irrigation

Open field Irrigation

Water Transmission

TECHNICAL DATA

Fluid: raw water or filtered water

Nominal Diameter (DN): from 25 to 350 mm (1'' to 14")

Available connections: Flanged, Threaded or Grooved

Nominal Pressure (PN): 16 bar

Medium Temperature: up to 70 °C

Body material: Ductile Iron

Standard Controls: RAF 63B pressure reducing valve controls with Raphael's 3-W brass pilot reinforced plastic tubing and plastic fittings.

APPROVALS

W/O

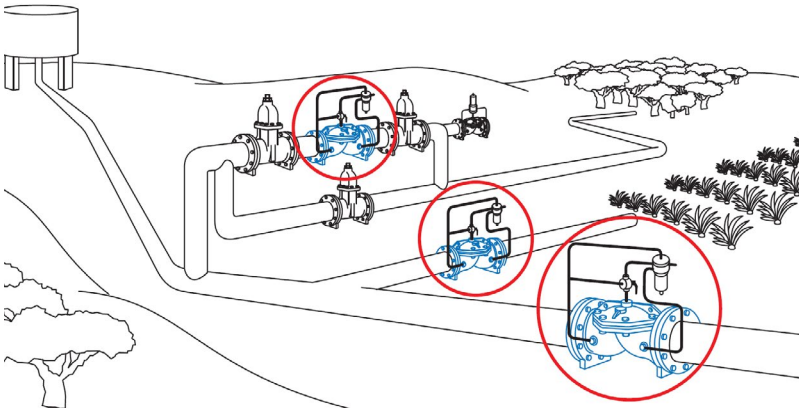

TYPICAL APPLICATIONS

- Water supply systems with medium pressure rating.
- Irrigation water distribution water treatment circulation and filtration network.
- The 3-W plastic pilot has a simple design that provides high corrosion resistance and cost effective prices.

ADJUSTMENTS

Downstream pressure adjustment up to 16 bars.

For pressure setting by pilot screw adjustment, please refer to available springs list.

FEATURES

- RAF valve two-layered Epoxy-polyester coated
- Self-cleaning screen filter
- 3-W pilot P-683
- 3-W Selecting cock valve
- Reinforced plastic tubing
- Glycerin filled pressure gauge

OPTIONAL FEATURES:

- Rilsan internal coating
- Large capacity external filter
- Stainless steel pilot
- Copper and stainless steel tubing
- Pressure check point

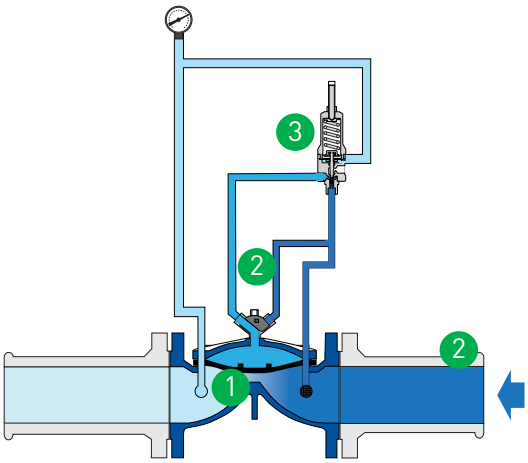

RAF-63B 3-W Pressure Reducing Control Valve

Ref	Name
1	Self-cleaning screen filter
2	3-W valve
3	3-W pilot P-683

Nominal Diameter		Recommended Flow Rate [m³/h]	
mm	inch	Min.	Max.
25	1	1	20
40	1.5	1	25
50	2	3	45
65	2.5	1	60
80D	3D	5	70
80	3	5	90
100D	4D	5	90
100	4	15	150
125D	5D	15	150
150D	6D	15	150
150	6	15	320
200	8	40	550
250	10	80	950
300	12	100	1200
350	14	100	1200

Nominal diameter only, for full dimensions please refer to engineering bulletin.

SPRING SELECTION

Pilot P-683

Setting range [Bar]	Color of spring
2-12 (standard)	Green
0.5-8	Red
3-16	Yellow

RAF SERIES

RAF 682

Pressure Reducing & Sustaining Control Valve 2-W Metal Pilot

The RAF 682 pressure reducing & sustaining valve is line pressure hydraulically actuated, 2-W pilot.
The RAF 682 maintains a minimum upstream pressure, as set on the 2-W pressure sustaining pilot and a maximum downstream as set on the 2-W pressure reducing pilot, regardless of flow changes.
The 2-W pilot configuration together with Raphael's patented diaphragm enable smooth and precise pressure control.

Maximal Nominal Pressure: 16 bar

Setting Range: 0.6 to 6 bar

MARKETS

Green house
Landscape
Mechanised Irrigation
Open field Irrigation
Water Transmission

TECHNICAL DATA

Fluid: raw water or filtered water

Nominal Diameter (DN): from 25 to 150 mm (1'' to 6D'')

Available connections: Flanged, Threaded or Grooved

Nominal Pressure (PN): 16 bar

Medium Temperature: up to 70 °C

Body material: Ductile Iron

Standard Controls: RAF 682 pressure reducing & sustaining valve controls with Raphael's 2-W P-182 and P-162 brass pilots, with built-in needle valve, reinforced plastic tubing and brass fittings.

APPROVALS

W/O

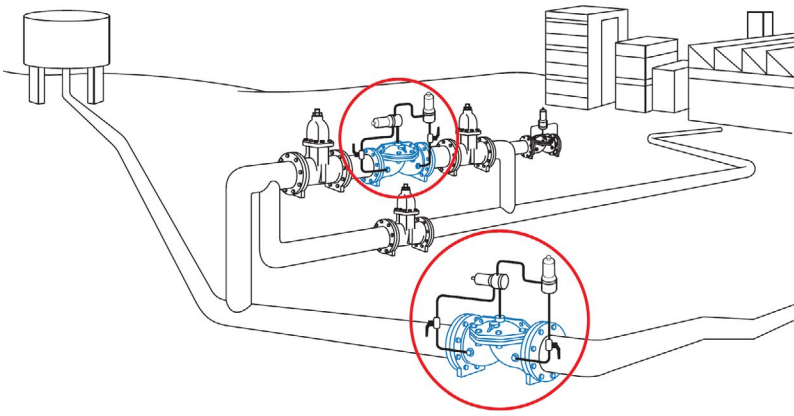

TYPICAL APPLICATIONS

- Water supply systems with medium pressure rating.
- Use the valve to define two pressure zones along a supply line.
- Irrigation water distribution and field control.

ADJUSTMENTS

Minimum upstream and maximum downstream pressure adjustment up to 16 bars.
For pressure setting by pilot screw adjustment, please refer to available springs list.

FEATURES

- RAF valve two-layered Epoxy-polyester coated
- Self-cleaning screen filter
- 2-W pilot P-182
- 2-W pilot P-162
- Reinforced plastic tubing
- Glycerin filled pressure gauge

OPTIONAL FEATURES:

- Rilsan internal coating
- Large capacity external filter
- Stainless steel pilot with built-in needle valve
- Copper and stainless steel tubing
- Pressure check point

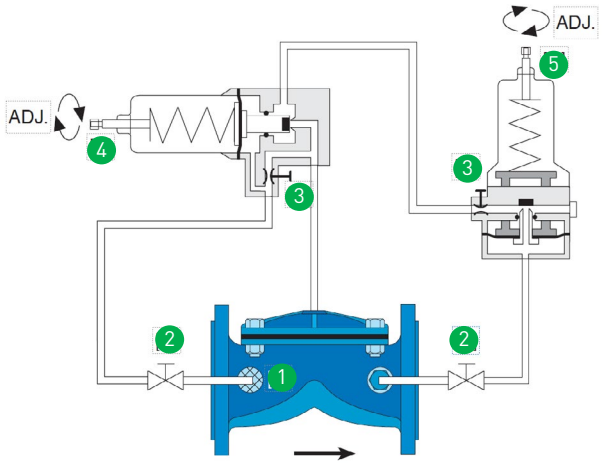

RAF-682 2-W Pressure Reducing & Sustaining Control Valve

Ref	Name
1	Self-cleaning screen filter
2	Cock valve
3	Built-in needle valve
4	2-W pilot P-182
5	2-W pilot P-162

Nominal Diameter		Flow Rate
mm	inch	m3/h
25	1	20
40	1.5	25
50	2	45
65	2.5	60
80D	3D	70
80	3	90
100D	4D	90
100	4	150
125D	5D	150
150D	6D	150

Nominal diameter only, for full dimensions please refer to engineering bulletin.

SPRING SELECTION

Pilot P-182

Setting range [Bar]	Color of spring
2-12 (standard)	Green
0.5-8	Red
3-16	Yellow

Pilot P-162

Setting range [Bar]	Color of spring
2-12 (standard)	Green
0.5-8	Red

RAF SERIES

RAF 68

Pressure Reducing & Sustaining Control Valve 2-W Metal Pilot

The RAF 68 pressure reducing & sustaining valve is line pressure hydraulically actuated, 2-W pilot. The RAF 68 maintains a minimum upstream pressure, as set on the 2-W pressure sustaining pilot and a maximum downstream as set on the 2-W pressure reducing pilot, regardless of flow changes. The 2-W pilot configuration together with Raphael's patented diaphragm enable smooth and precise pressure control.

Maximal Nominal Pressure: 16 bar

Setting Range: 0.6 to 6 bar

MARKETS

Green house

Landscape

Mechanised Irrigation

Open field Irrigation

Water Transmission

TECHNICAL DATA

Fluid: raw water or filtered water

Nominal Diameter (DN): from 150 to 350 mm (6" to 14")

Available connections: Flanged, Threaded or Grooved

Nominal Pressure (PN): 16 bar

Medium Temperature: up to 70 °C

Body material: Ductile Iron

Standard Controls: RAF 68 pressure reducing & sustaining valve controls with Raphael's 2-W P-181 and P-161 brass pilots, reinforced plastic tubing and brass fittings.

APPROVALS

W/O

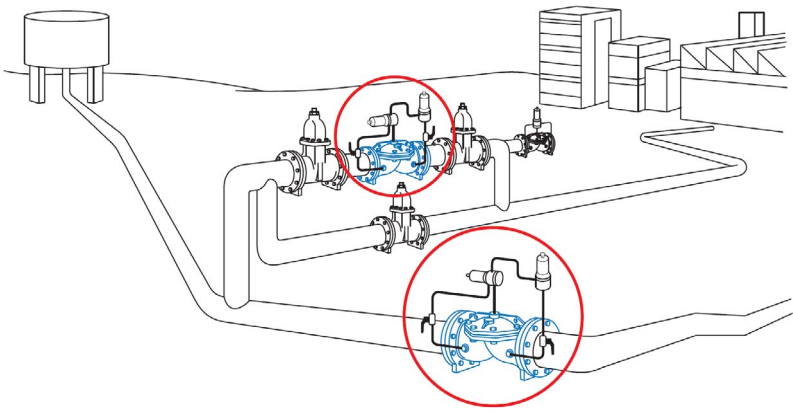

TYPICAL APPLICATIONS

- Water supply systems with medium pressure rating.
- Use the valve to define two pressure zones along a supply line.
- Irrigation water distribution and field control.

ADJUSTMENTS

Minimum upstream and maximum downstream pressure adjustment up to 16 bars.
For pressure setting by pilot screw adjustment, please refer to available springs list.

FEATURES

- RAF valve two-layered Epoxy-polyester coated
- Self-cleaning screen filter
- 2-W pilot P-161
- 2-W pilot P-181
- Needle valve
- Reinforced plastic tubing
- Glycerin filled pressure gauge

OPTIONAL FEATURES:

- Rilsan internal coating
- Large capacity external filter
- Stainless steel pilot
- Stainless steel needle valve
- Copper and stainless steel tubing
- Pressure check point

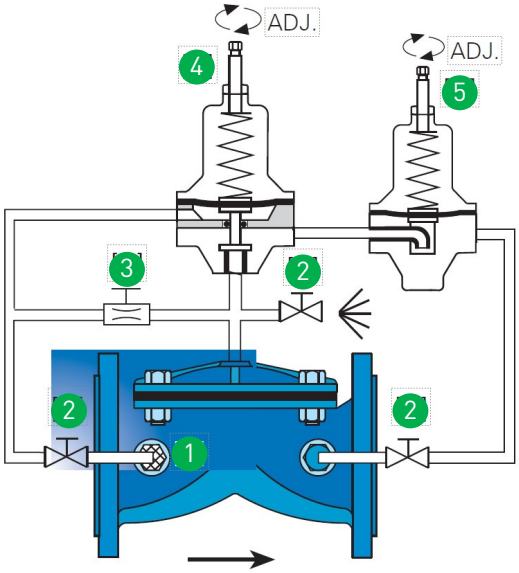

RAF-682 2-W Pressure Reducing & Sustaining Control Valve

Ref	Name
1	Self-cleaning screen filter
2	Cock valve
3	Needle valve
4	2-W pilot P-161
5	2-W pilot P-181

Nominal Diameter		Flow Rate
mm	inch	m3/h
150	6	320
200	8	550
250	10	950
300	12	1200
350	14	1200

Nominal diameter only, for full dimensions please refer to engineering bulletin.

SPRING SELECTION

Pilot P-161, P-181

Setting range [Bar]	Color of spring
2-10 (standard)	Green
0.5-4	Blue
0.5-6	Red
2-16	Yellow

RAF SERIES

RAF 683B

Pressure Reducing & Sustaining Control Valve

3-W Metal Pilot

The RAF 683B pressure reducing & sustaining valve is line pressure hydraulically actuated, 3-W pilot.
The RAF 683B maintains a minimum upstream pressure, as set on the 3-W pressure sustaining pilot and a maximum downstream as set on the 3-W pressure reducing pilot, regardless of flow changes.
The 3-W pilots configuration together with Raphael's patented diaphragm enable smooth and precise pressure control.

Maximal Nominal Pressure: 16 bar

Setting Range: 0.6 to 6 bar

MARKETS

Green house

Landscape

Mechanised Irrigation

Open field Irrigation

Water Transmission

TECHNICAL DATA

Fluid: raw water or filtered water

Nominal Diameter (DN): from 25 to 350 mm (1'' to 14'')

Available connections: Flanged, Threaded or Grooved

Nominal Pressure (PN): 16 bar

Medium Temperature: up to 70 °C

Body material: Ductile Iron

Standard Controls: RAF 683B pressure reducing & sustaining valve controls with Raphael's 3-W P-683 pilots, reinforced plastic tubing and brass fittings.

APPROVALS

W/O

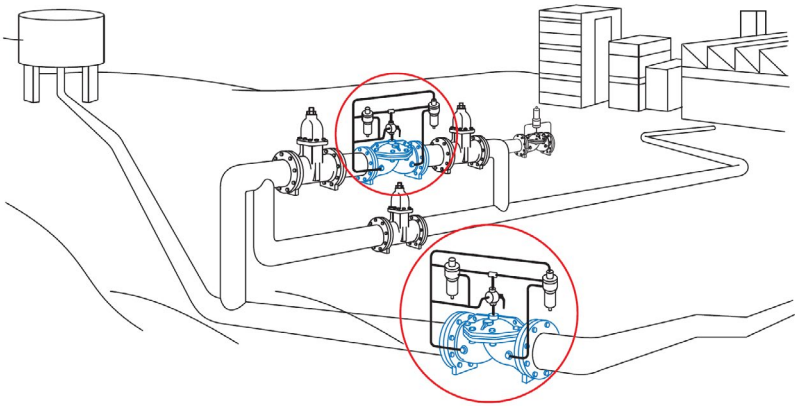

TYPICAL APPLICATIONS

- Water supply systems with medium pressure rating.
- Use the valve to define two pressure zones along a supply line.
- Irrigation water distribution and field control.

ADJUSTMENTS

Minimum upstream and maximum downstream pressure adjustment up to 16 bars.
For pressure setting by pilot screw adjustment, please refer to available springs list.

FEATURES

- RAF valve two-layered Epoxy-polyester coated
- Self-cleaning screen filter
- 3-W pilot P-683 (configured as sustaining)
- 3-W pilot P-683 (configured as reducing)
- 3-W selecting cock valve
- Reinforced plastic tubing
- Glycerin filled pressure gauge

OPTIONAL FEATURES:

- Rilsan internal coating
- Large capacity external filter
- Stainless steel pilot
- Copper and stainless steel tubing
- Pressure check point

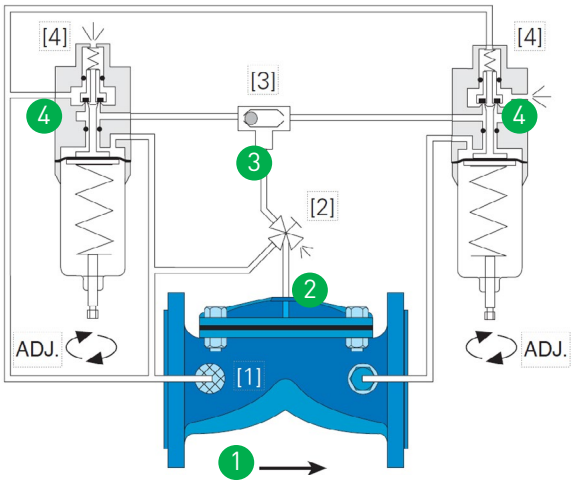

RAF-683B 3-W Pressure Reducing & Sustaining Control Valve

Ref	Name
1	Self-cleaning screen filter
2	3-W valve
3	Shuttle valve
4	3-W pilot P-683

Nominal Diameter		Flow Rate
mm	inch	m3/h
25	1	20
40	1.5	25
50	2	45
65	2.5	60
80D	3D	70
80	3	90
100D	4D	90
100	4	150
125D	5D	150
150D	6D	150
150	6	320
200	8	550
250	10	950
30	12	1200
350	14	1200

Nominal diameter only, for full dimensions please refer to engineering bulletin.

SPRING SELECTION

Pilot P-683

Setting range [Bar]	Color of spring
2-12 (standard)	Green
0.5-8	Red
3-16	Yellow

RAF SERIES

RAF 82

Pressure Sustaining Relief Control Valve 2-W Metal Pilot

The RAF 82 pressure sustaining/relief valve is line pressure hydraulically actuated, 2-W pilot. The RAF 82 maintains a minimum upstream pressure, as set on the 2-W pressure sustaining pilot, regardless of flow changes.
The RAF 82 pressure sustaining/relief valve will fully open should upstream pressure exceed 2-W pilot set pressure.
The 2-W pilot configuration together with Raphael's patented diaphragm enable smooth and precise upstream pressure control.

Maximal Nominal Pressure: 16 bar

Setting Range: 0.6 to 6 bar

MARKETS

Green house · Landscape · Mechanised Irrigation · Open field Irrigation · Water Transmission

TECHNICAL DATA

Fluid: raw water or filtered water

Nominal Diameter (DN): from 25 to 150 mm (1'' to 6D'')

Available connections: Flanged, Threaded or Grooved

Nominal Pressure (PN): 16 bar

Medium Temperature: up to 70 °C

Body material: Ductile Iron

Standard Controls: RAF 82 pressure reducing/relief valve controls with Raphael's 2-W P-182 pilot with built-in needle valve, reinforced plastic tubing and brass fittings.

APPROVALS

W/O

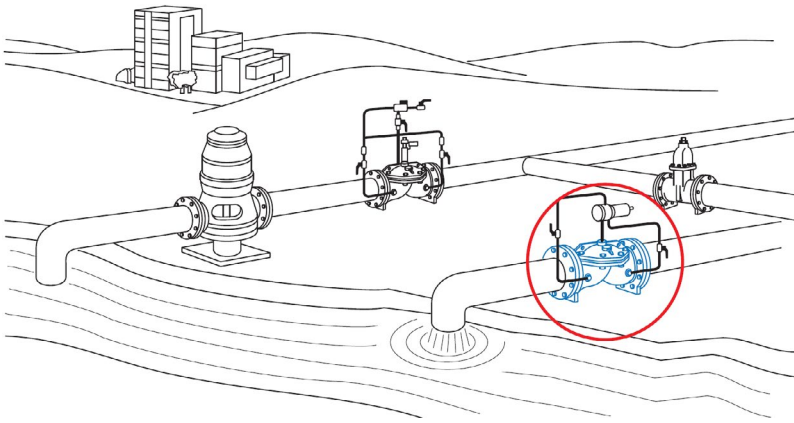

TYPICAL APPLICATIONS

- Water supply systems with medium pressure rating.
- Use the valve to maintain a constant upstream pressure and to avoid an undesirable high pressure.
- Irrigation water distribution and field control.

ADJUSTMENTS

Minimum upstream pressure adjustment up to 16 bars.
For pressure setting by pilot screw adjustment, please refer to available springs list.

FEATURES

- RAF valve two-layered Epoxy-polyester coated
- Self-cleaning screen filter
- 2-W pilot P-182
- Reinforced plastic tubing
- Glycerin filled pressure gauge

OPTIONAL FEATURES:

- Rilsan internal coating
- Large capacity external filter
- Stainless steel pilot with built-in needle valve
- Copper and stainless steel tubing
- Pressure check point

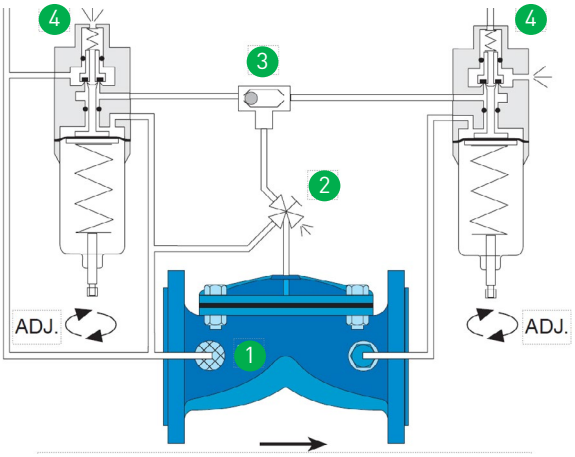

RAF-683B 2-W Pressure Sustaining Relief Control Valve

Ref	Name
1	Self-cleaning screen filter
2	Cock valve
3	Built-in needle valve
4	2-W pilot P-182

Nominal Diameter		Flow Rate
mm	inch	m3/h
25	1	20
40	1.5	25
50	2	45
65	2.5	70
80D	3D	70
80	3	90
100D	4D	90
100	4	150
125D	5D	150
150D	6D	150

Nominal diameter only, for full dimensions please refer to engineering bulletin.

SPRING SELECTION

Pilot P-182

Setting range [Bar]	Color of spring
2-12 (standard)	Green
0.5-8	Red
3-16	Yellow

RAF SERIES

RAF 80

Pressure Sustaining Relief Control Valve

2-W Metal Pilot

The RAF 80 pressure sustaining/relief valve is line pressure hydraulically actuated, 2-W pilot. The RAF 80 maintains a minimum upstream pressure, as set on the 2-W pressure sustaining pilot, regardless of flow changes.
The RAF 80 pressure sustaining/relief valve will fully open should upstream pressure exceed 2-W pilot set pressure.
The 2-W pilot configuration together with Raphael's patented diaphragm enable smooth and precise upstream pressure control.

Maximal Nominal Pressure: 16 bar

Setting Range: 0.6 to 6 bar

MARKETS

Green house

Landscape

Mechanised Irrigation

Open field Irrigation

Water Transmission

TECHNICAL DATA

Fluid: raw water or filtered water

Nominal Diameter (DN):
from 150 to 350 mm (6'' to 14")

Available connections: Flanged, Threaded or Grooved

Nominal Pressure (PN):
16 bar

Medium Temperature:
up to 70 °C

Body material: Ductile Iron

Standard Controls: RAF 80 pressure reducing/relief valve controls with Raphael's 2-W P-181 pilot, reinforced plastic tubing and brass fittings.

APPROVALS

W/O

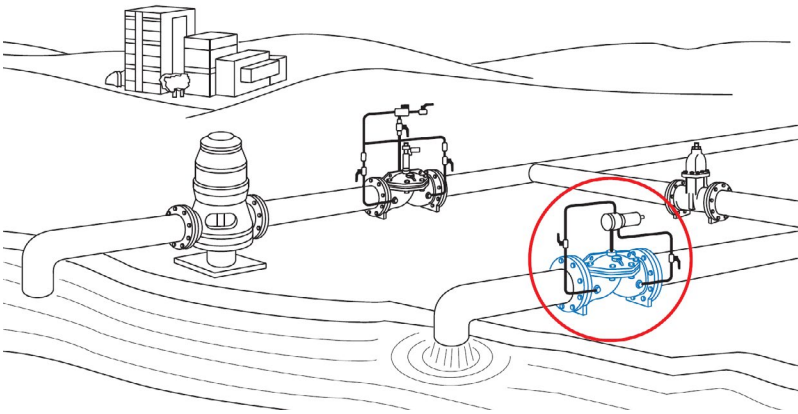

TYPICAL APPLICATIONS

- Water supply systems with medium pressure rating.
- Use the valve to maintain a constant upstream pressure and to avoid an undesirable high pressure.
- Irrigation water distribution and field control.

ADJUSTMENTS

Minimum upstream pressure adjustment up to 16 bars.
For pressure setting by pilot screw adjustment, please refer to available springs list.

FEATURES

- RAF valve two-layered Epoxy-polyester coated
- Self-cleaning screen filter
- 2-W pilot P-181
- Needle valve
- Reinforced plastic tubing
- Glycerin filled pressure gauge

OPTIONAL FEATURES:

- Rilsan internal coating
- Large capacity external filter
- Stainless steel pilot
- Stainless steel needle valve
- Copper and stainless steel tubing
- Pressure check point

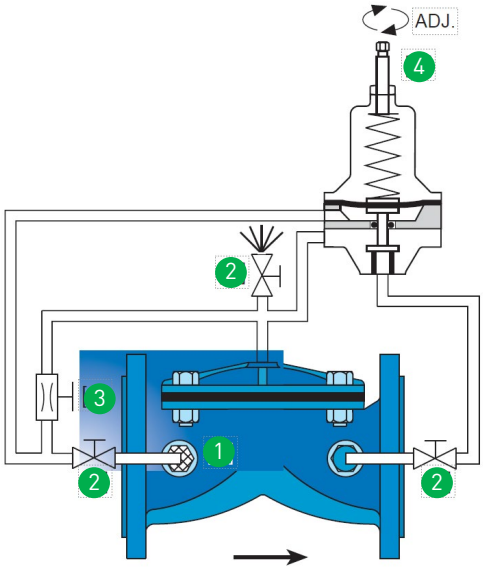

RAF-80 2-W Pressure Sustaining Relief Control Valve

Ref	Name
1	Self-cleaning screen filter
2	Cock valve
3	Needle valve
4	2-W pilot P-181

Nominal Diameter		Flow Rate
mm	inch	m3/h
150	6	320
200	8	550
250	10	950
300	12	1200
350	14	1200

Nominal diameter only, for full dimensions please refer to engineering bulletin.

SPRING SELECTION

Pilot P-181

Setting range [Bar]	Color of spring
2-10 (standard)	Green
0.5-4	Blue
0.5-6	Red
2-16	Yellow

RAF SERIES

RAF 83B

Pressure Sustaining Control Valve

3-W Metal Pilot

RAF 83B pressure sustaining valve is line pressure hydraulically actuated, 3-W pilot.
The RAF 83B maintains a minimum upstream pressure, as set on the 3-W pilot, regardless of flow changes.
The RAF 83B pressure sustaining valve will fully open should upstream pressure exceed 3-W pilot set pressure.
The 3-W pilot configuration together with Raphael's patented diaphragm enable smooth and precise upstream pressure control.

Maximal Nominal Pressure: 16 bar

Setting Range: 0.6 to 6 bar

MARKETS

Green house

Landscape

Mechanised Irrigation

Open field Irrigation

Water Transmission

TECHNICAL DATA

Fluid: raw water or filtered water

Nominal Diameter (DN): from 25 to 350 mm (1'' to 14")

Available connections: Flanged, Threaded or Grooved

Nominal Pressure (PN): 16 bar

Medium Temperature: up to 70 °C

Body material: Ductile Iron

Standard Controls: RAF 80 pressure reducing/relief valve controls with Raphael's 2-W P-181 pilot, reinforced plastic tubing and brass fittings.

APPROVALS

W/O

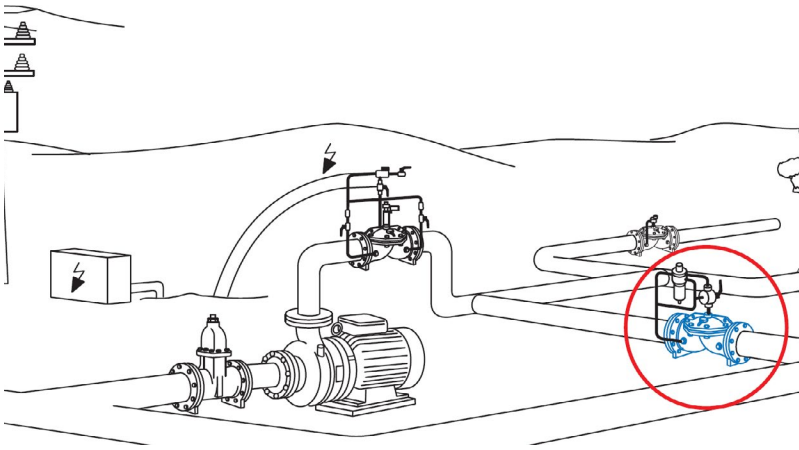

TYPICAL APPLICATIONS

- Water supply systems with medium pressure rating.
- Use the valve to maintain a constant upstream pressure and to avoid an undesirable high pressure.
- Irrigation water distribution and field control.

ADJUSTMENTS

Minimum upstream pressure adjustment up to 16 bars.
For pressure setting by pilot screw adjustment, please refer to available springs list.

FEATURES

- RAF valve two-layered Epoxy-polyester coated
- Self-cleaning screen filter
- 3-W pilot P-683
- 3-W selecting cock valve
- Reinforced plastic tubing
- Glycerin filled pressure gauge

OPTIONAL FEATURES:

- Rilsan internal coating
- Large capacity external filter
- Stainless steel pilot
- Copper and stainless steel tubing
- Pressure check point

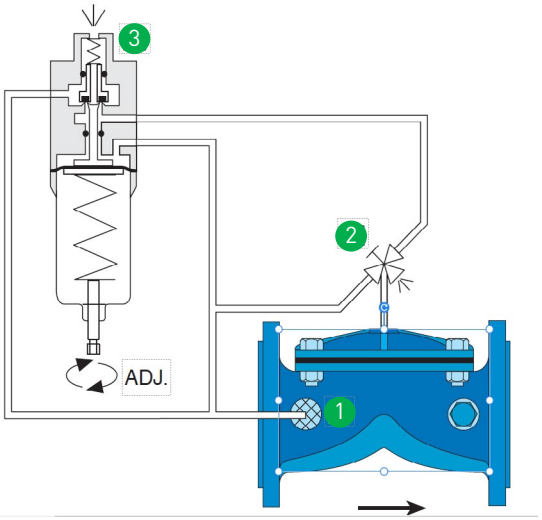

RAF-83B 3-W Pressure Sustaining Control Valve

Ref	Name
1	Self-cleaning screen filter
2	3-W valve
3	3-W pilot P-683

Nominal Diameter		Flow Rate
mm	inch	m3/h
25	1	20
40	1.5	25
50	2	45
65	2.5	70
80D	3D	70
80	3	90
100D	4D	90
100	4	150
125D	5D	150
150D	6D	150
150	6	320
200	8	550
250	10	950
300	12	1200
350	14	1200

Nominal diameter only, for full dimensions please refer to engineering bulletin.

SPRING SELECTION

Pilot P-181

Setting range [Bar]	Color of spring
2-12 (standard)	Green
0.5-8	Red
3-16	Yellow

RAF SERIES

RAF 80Q

Quick Pressure Relief Control Valve

2-W Metal Pilot

The RAF 80Q Quick pressure relief valve is line pressure hydraulically actuated by 2-W quick pressure relief pilot.
The 2-W relief pilot has an upstream sensitive spring-loaded membrane, that can be preset to maintain a desirable upstream pressure.
The RAF 80Q is quickly fully open when upstream pressure exceed the 2-W pilot set pressure. The 2-W pilot configuration together with Raphael's patented diaphragm enable quick and high flow relief valve opening.

Maximal Nominal Pressure: 16 bar

Setting Range: 0.6 to 6 bar

MARKETS

Green house

Landscape

Mechanised Irrigation

Open field Irrigation

Water Transmission

TECHNICAL DATA

Fluid: raw water or filtered water

Nominal Diameter (DN): from 25 to 350 mm (1'' to 14")

Available connections: Flanged, Threaded or Grooved

Nominal Pressure (PN): 16 bar

Medium Temperature: up to 70 °C

Body material: Ductile Iron

Standard Controls: RAF 80Q Quick relief valve controls with Raphael's 2-W relief pilot, reinforced plastic tubing and brass fittings.

APPROVALS

W/O

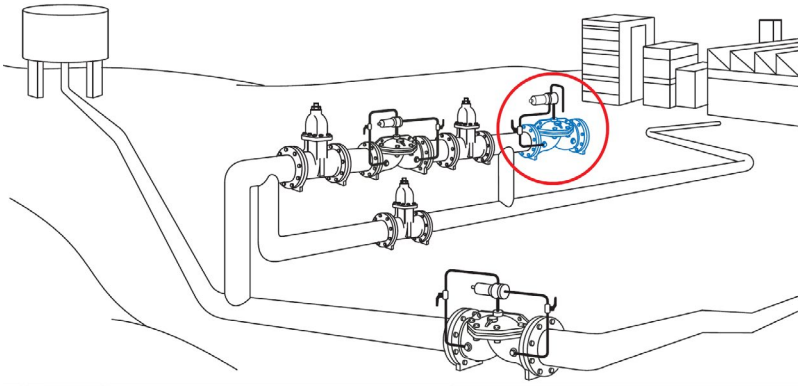

TYPICAL APPLICATIONS

- Water supply systems with medium pressure rating.
- Use the valve to protect water systems from quikly rising excessive pressure.
- Irrigation water distribution and field control.

ADJUSTMENTS

Relief pressure adjustment up to 16 bars.
For pressure setting by pilot screw adjustment, please refer to available springs list.

FEATURES

- RAF valve two-layered Epoxy-polyester coated
- Self-cleaning screen filter
- 2-W relief pilot
- Reinforced plastic tubing

OPTIONAL FEATURES:

- Rilsan internal coating
- Large capacity external filter
- Stainless steel pilot
- Stainless steel needle valve
- Copper and stainless steel tubing

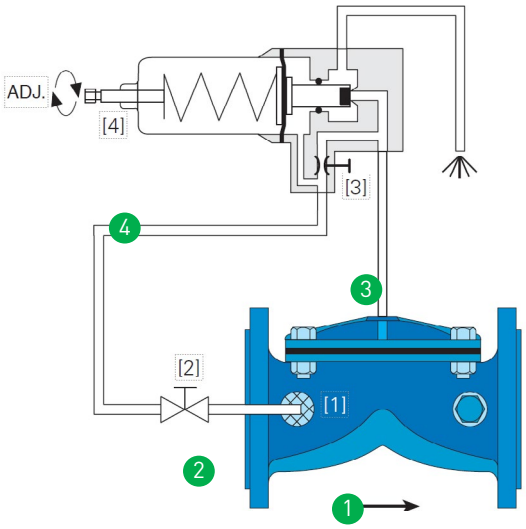

RAF-80Q Quick Pressure Relief Control Valve

Ref	Name
1	Self-cleaning screen filter
2	Cock valve
3	Built-in needle valve
4	2-W relief pilot

Nominal Diameter		Flow Rate
mm	inch	m3/h
25	1	28
40	1.5	35
50	2	60
65	2.5	80
80D	3D	100
80	3	120
100D	4D	120
100	4	180
125D	5D	200
150D	6D	200
150	6	400
200	8	750
250	10	1150
300	12	1700
350	14	1700

Nominal diameter only, for full dimensions please refer to engineering bulletin.

SPRING SELECTION

Pilot P-181

Setting range [Bar]	Color of spring
2-10 (standard)	Green
0.5-4	Blue
0.5-6	Red
2-16	Yellow

RAF SERIES

RAF 70

Flow Rate Control Valve

2-W Metal Pilot

The RAF 70 flow rate control valve is line pressure hydraulically actuated, 2-W pilot. Normally the valve is partly open to allow a constant flow rate. The head loss across the orifice is proportional to the flow rate.
The RAF 70 maintains a constant preset flow rate, as set on the 2-W flow rate pilot, regardless of pressure changes.
The 2-W pilot configuration together with Raphael's patented diaphragm enable smooth and precise flow rate control.

Maximal Nominal Pressure: 16 bar

Setting Range: 0.6 to 6 bar

MARKETS

Green house

Landscape

Mechanised Irrigation

Open field Irrigation

Water Transmission

TECHNICAL DATA

Fluid: raw water or filtered water

Nominal Diameter (DN): from 25 to 350 mm (1" to 14")

Available connections: Flanged, Threaded or Grooved

Nominal Pressure (PN): 16 bar

Medium Temperature: up to 70 °C

Body material: Ductile Iron

Standard Controls: RAF 70 flow rate valve controls with Raphael's 2-W P-100 pilot, reinforced plastic tubing and brass fittings.

APPROVALS

W/O

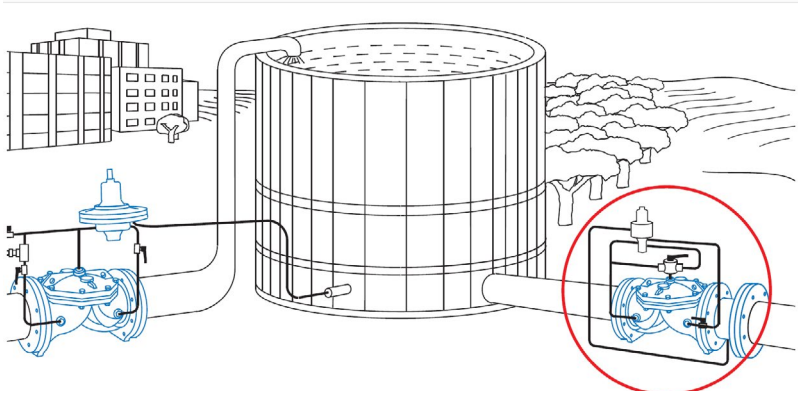

TYPICAL APPLICATIONS

- Water supply systems with medium pressure rating.
- Use RAF 70 to eliminate excessive pumping or to limit the water demand.
- Irrigation water distribution and field control.

ADJUSTMENTS

Flow rate adjustment + 20% flow rate.

FEATURES

- RAF valve two-layered Epoxy-polyester coated
- Self-cleaning screen filter
- 2-W pilot P-100
- Needle valve
- Reinforced plastic tubing
- Orifice plate

OPTIONAL FEATURES:

- Rilsan internal coating
- Large capacity external filter
- 3-W pilot P-103
- Copper and stainless steel tubing

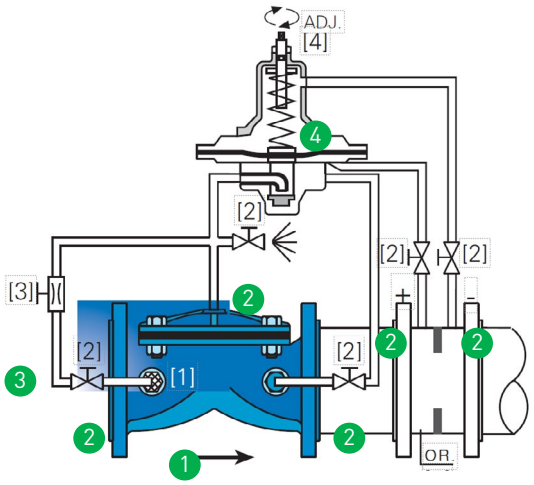

RAF-70 2-W Flow Rate Control Valve

Ref	Name
1	Self-cleaning screen filter
2	Cock valve
3	Needle valve
4	2-W pilot P-100
5	Orifice plate

Nominal Diameter		Flow Rate
mm	inch	m3/h
25	1	10
40	1.5	16
50	2	25
65	2.5	43
80D	3D	43
80	3	61
100D	4D	61
100	4	97
125D	5D	97
150D	6D	97
150	6	180
200	8	360
250	10	612
300	12	721
350	14	721

Nominal diameter only, for full dimensions please refer to engineering bulletin.

* When ordering, please refer to Raphael for orifice selection according to flow requirements and operating conditions.
Please note that the calibrated orifice plate will be specifically manufactured per operating condition and according to the data given by the customer.

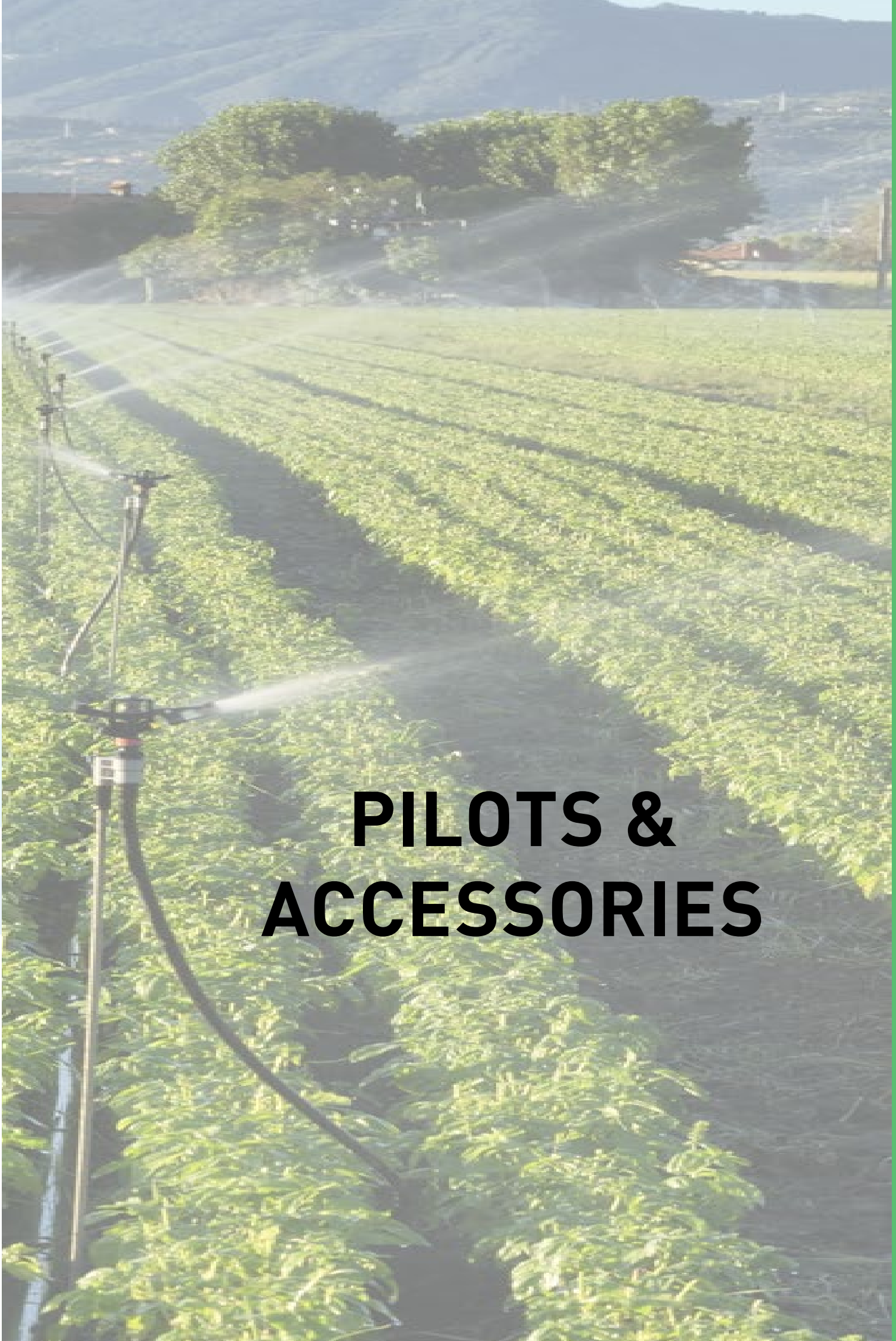

PILOTS & ACCESSORIES

3 WAY PRESSURE AND FLOW PILOT CONTROL

PMF PLASTIC PILOT

3-WAY FLOW CONTROL MODE

Flow control pilot

Valve size: 1"-4"

Equipped with four connections:

1. Connected to the valve downstream
2. Connected to the valve upstream
3. Connected to the valve control chamber
4. Drain, open to the atmosphere
5. Connected to calibrated orifice

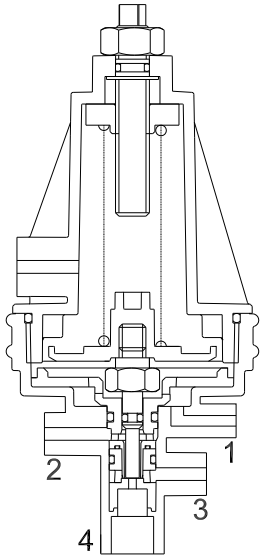

PMF 3-W Flow Control Mode

Adjusting

Turning the adjusting screw clockwise (+) flow will increase
Turning the adjusting screw counter clockwise (-) flow will decrease

TECHNICAL DATA	
Pressure rating	10 bar (150 psi)
Maximum temperature	50°C (120°F)
Port Connections	1/8"BSP X 8 mm

PMR PLASTIC PILOT

3 WAY PRESSURE REDUCING MODE

High performance pilot for pressure reducing control

Valve size: 1“-4“

Equipped with four connections:

1. Sensor connection - Connected to valve outlet.
   Conveys downstream pressure into the pilot.
2. Drain connection- Connected to atmosphere.
3. Command connection - Connected to valve control chamber.
4. Pressure connection- Connected to valve inlet.

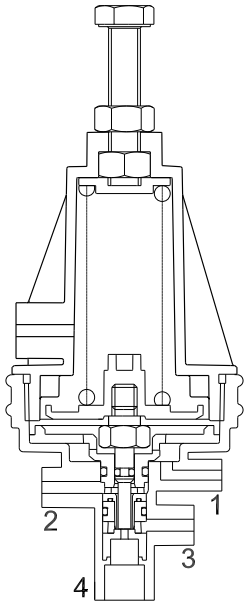

PRM 2-W Pressure Reducing Mode

PRESSURE REDUCING VALVE

Maintains a steady pressure after the hydraulic valve (downstream pressure) at varying flows and inlet (upstream) pressures.

Adjusting

Turning the adjusting screw counter clockwise (-) pressure will decrease.
Turning the adjusting screw clockwise (+) pressure will increase.

Spring selection pressure sustaining pilot

Setting range [Bar]	Color of spring
1 - 6 (standard)	Green
0.6 - 2.7	Red

TECHNICAL DATA	
Pressure rating	10 bar (150 psi)
Pressure adjustment range	0.3-7.5 bar (5-100 psi)
Maximum temperature	50°C (120°F)
Port Connections	1/8"BSP X 8 mm

PMSR PLASTIC PILOT

3 WAY PRESSURE SUSTAINING MODE

Universal pilot to control valve as pressure reducing or pressure sustaining valve

Valve size: 1"-4"

Equipped with four connections:

1. Sensor connection - Connected to valve inlet.
2. Pressure connection- Connected to valve inlet.
3. Command connection - Connected to valve control chamber.
4. Drain connection- Connected to atmosphere.

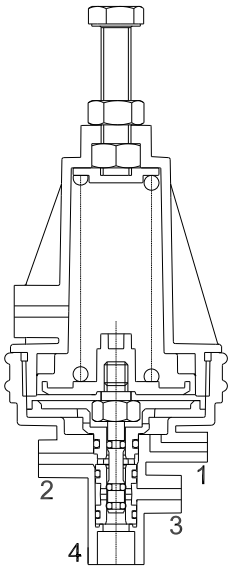

PMSR 3-W Pressure Sustaining Mode
3-W Pressure Reducing Mode

PRESSURE SUSTAINING VALVE

Maintains set pressure before the hydraulic valve (upstream pressure) at varying flows or inlet (upstream) pressures.

Setting range [Bar]	Color of spring
1 - 7 (standard)	Green
0.8 - 3	Red

3-WAY PRESSURE REDUCING MODE

Universal pilot to control valve as pressure reducing or pressure sustaining valve

Valve size: 1"-4"

Equipped with four connections:

1. Sensor connection - Connected to valve outlet.
2. Drain connection- Connected to atmosphere.
3. Command connection - Connected to valve control chamber.
4. Pressure connection- Connected to valve inlet.

PRESSURE REDUCING VALVE

Maintains a steady pressure after the hydraulic valve (downstream pressure) at varying flows or inlet (upstream) pressures.

Setting range [Bar]	Color of spring
1 - 6 (standard)	Green
0.6 - 2.7	Red

Adjusting

Turning the adjusting screw counter clockwise (-) pressure will decrease.
Turning the adjusting screw clockwise (+) pressure will increase.

TECHNICAL DATA	
Pressure rating	10 bar (150 psi)
Pressure adjustment range	0.3-7.5 bar (5-100 psi)
Maximum temperature	50°C (120°F)
Port Connections	1/8"BSP X 8 mm

P-161

2 WAY PRESSURE REDUCING PILOT

Valve size: 1“- 14“

The P-161, 2-W pilot, operates when hydraulic pressure is applied below the spring loaded membrane wich is connected to the pilot's seal trim. The P-161 is a Normally Open (N.O) pilot. Once pipeline pressure is built downstream of the main valve, it will be conveyed to the pilot's membrane through the sensor port. When the pressure surpasses the set point (pre adjusted through the pilot's adjusting screw) the membrane moves upwards and water passage closes, closing the main valve. When the downstream pressure reduces below the pilot's set point, the membrane moves downwards and opening the water passage.

Adjusting

To verify the spring's pressure range, check the label specifications and compare to the spring range table. Verify that the needle valve is only 1/2 turn open. Turning adjusting screw clockwise will increase the set point and turning the counter clockwise will decrease it.
Pay attention, the valve takes a while to reach its new set point after changing the preset pressure. Turn adjusting screw 1/2 turn at a time and wait until the valve reaches stability. If necessary, turn again until reaching the desired set point.
After reaching the desired set point, lock the adjusting screw by tightening the locking nut firmly to the cover.

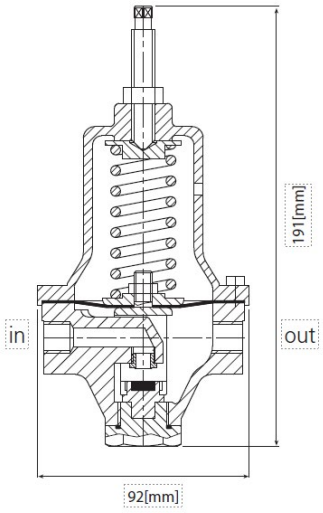

General Information

Pressure Rating: PN-16

Regulation Ratio: 5:1

Kv Rate: 0.25 [l/sec]

Senstivity: 0.1 [bar]

Max Temperature: 90[°C

Ports: 1/4"

Weight: 2.0[kg]

Spring Selection Pilot P-161

Setting range [Bar]	Color of spring
2-10 (standard)	Green
0.5-4	Blue
0,5-6	Red
2-16	Yellow

METAL PILOT

P-162
2 WAY PRESSURE REDUCING PILOT

Valve size: 1“- 14“

The P-162, 2-W pilot, operates when hydraulic pressure is applied below the spring loaded membrane wich is connected to the pilot's seal trim.
The P-162 is a Normally Open (N.O) pilot.
Once pipeline pressure is built downstream of the main valve, it will be conveyed to the pilot's membrane through the sensor port. When the pressure surpasses the set point (pre adjusted through the pilot's adjusting screw) the membrane moves upwards and water passage closes, closing the main valve. When the downstream pressure reduces below the pilot's set point the membrane moves downwards, opening the water passage and allowing the main valve to open.

Adjusting

To verify the spring's pressure range, check the label specifications and compare to the spring range table. Verify that the needle valve is 1/2 turn open.
Turning adjusting screw clockwise will increase the set point and turning the counter clockwise will decrease it.
Pay attention, the valve takes a while to reach its new set point after changing the preset pressure. Turn adjusting screw 1/2 turn at a time and wait until the valve reaches stability. If necessary, turn again until reaching the desired set point.
After reaching the desired set point, lock the adjusting screw by tightening the locking nut firmly
to the cover.

General Information

Pressure Rating: PN-16

Regulation Ratio: 4:1

Kv Rate: 0.25 [l/sec]

Senstivity: 0.1 [bar]

Max Temperature: 90[°C

Ports: 1/4”

Weight: 0.75 [kg]

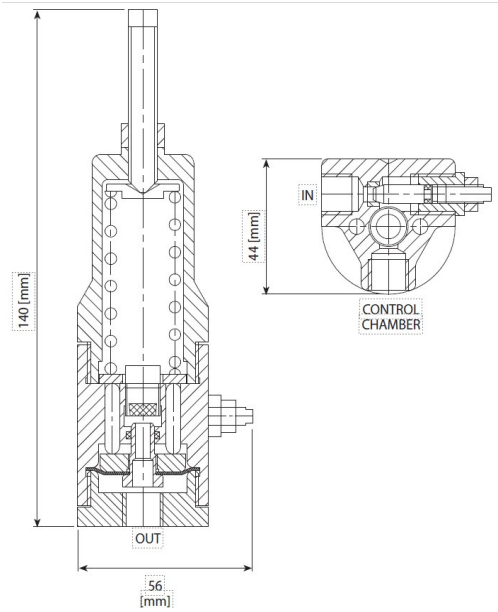

Spring Selection Pilot P-162

Setting range [Bar]	Color of spring
2-12 (standard)	Green
0,5-8	Red

P-683
3 WAY PRESSURE SUSTAINING/REDUCING PILOT

Valve size: 1“- 14“

The P-683, 3-W pilot, operates only if pipeline conditions changes, when hydraulic pressure is applied below the spring loaded membrane, wich is connected to the pilot's seal trim, alternating the pilot's water passage.
When the pilot reaches the desired set point, the seal trim locks all water passages, there is no water flow in the pilot and the pilot remains in this position until a change in the downstream pressure.
The P-683 can be used either as a Normally Open(N.O) or as a Normally Close (N.C) pilot.

(N.O) Configuration

When the pressure head in the pilot's sensor port is lower than the set point, the membrane moves downwards, closing pressure supply to the control chamber and opening a water passage.
Once pressure head is built, the membrane moves upwards opening the pressure supply to the control chamber and closing the pilot's vent, allowing the main valve to close.

Adjusting

To verify the spring's pressure range, check the label specifications and compare to the spring range table. The valve takes a while to reach its new set point after changing the preset pressure.
Turn adjusting screw 1/2 turn at a time and wait until the valve reaches stability.
If necessary, turn again until reaching the set point and lock the adjusting screw.
Try to avoid draining the water from the pilot on the valve's body, or near electric sources.

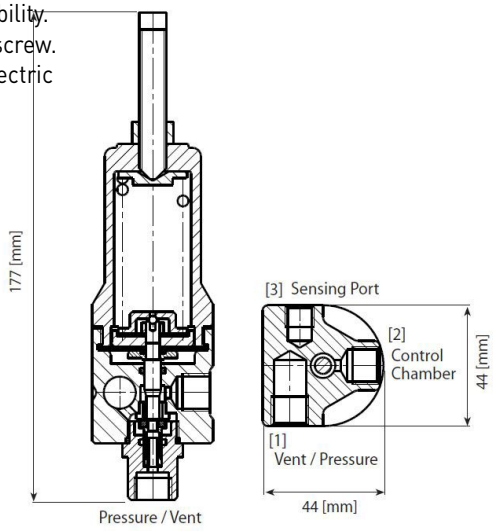

General Information

Pressure Rating: PN-16

Regulation Ratio: 3:1

Kv Rate: 0.25 [l/sec]

Senstivity: 0.1 [bar]

Max Temperature: 90[°C

Ports: 1/4”

Weight: 0.9[kg]

Spring Selection Pilot P-683

Setting range [Bar]	Color of spring
2-12 (standard)	Green
0,5-8	Red
3-16	Yellow

METAL PILOT

P-181
2 WAY PRESSURE SUSTAINING/RELIEF PILOT

Valve size: 1“- 14“

The P-181, 2-W pilot, operates when hydraulic pressure is applied below the spring loaded membrane, wich is connected to the pilot's seal trim.
The P-181 is a Normally Close (N.C) pilot.
When no pressure is applied below the spring loaded membrane, the pilot commands the main valve to close. When the pressure surpasses the set point, the membrane moves upwards and water passage opens, allowing the main valve to open.
When the downstream pressure reduces below the pilot's set point, the membrane moves downwards, closing the water passage.
During the pilot's operation water circulates constantly through the pilot, it provides an immediate response to any changes in pipeline pressure.

Adjusting

To verify the spring's pressure range, check the label specifications and compare to the spring range table. Verify that the needle valve is 1/2 turn open:
Turning adjusting screw clockwise will increase the set point and turning the counter clockwise will decrease it. The valve takes a while to reach its new set point after changing the preset pressure. Turn adjusting screw 1/2 turn at a time and wait until the valve reaches stability. If necessary, turn again until reaching the desired set point. After reaching the desired set point, lock the adjusting screw by tightening the locking nut firmly to the cover.

General Information

Pressure Rating: PN-16

Regulation Ratio: 5:1

Kv Rate: 0.25 [l/sec]

Senstivity: 0.1 [bar]

Max Temperature: 90[°C

Ports: 1/4"

Weight: 2.0 [kg]

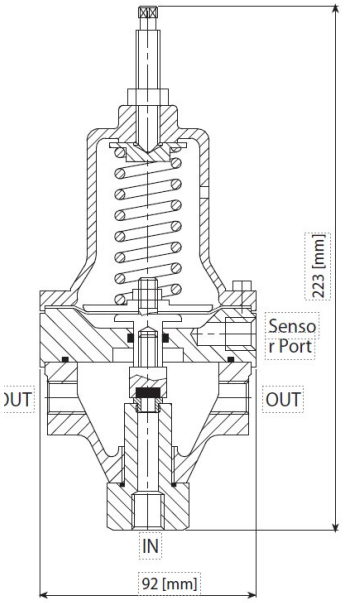

Spring Selection Pilot P-181

Setting range [Bar]	Color of spring
2-10 (standard)	Green
0.5-4	Blue
0,5-6	Red
2-16	Yellow

P-182
2 WAY PRESSURE SUSTAINING/RELIEF PILOT

Valve size: 1“- 14“

The P-182, 2-W pilot, operates when hydraulic pressure is applied below the spring loaded membrane wich is connected to the pilot's seal trim.
The P-182 is a Normally Close (N.C) pilot. When no pressure is applied below the spring loaded membrane, the pilot commands the main valve to close.
When the pressure surpasses the set poin, the membrane moves upwards and water passage opens, allowing the main valve to open. When the downstream pressure reduces below the pilot's set point, the membrane moves downwards, closing the water passage.
During the pilot's operation water circulates constantly through the pilot, it provides an immediate response to any changes in pipeline pressure.

Adjusting

To verify the spring's pressure range, check the label specifications and compare to the spring range table. Verify that the pilot's built-in needle valve is 1/2 turn open. Turning adjusting screw clockwise will increase the set point and turning the counter clockwise will decrease it. The valve takes a while to reach its new set point after changing the preset pressure.
Turn adjusting screw 1/2 turn at a time and wait until the valve reaches stability. If necessary, turn again until reaching the desired set point.
After reaching the desired set point, lock the adjusting screw by tightening the locking nut firmly to the cover.

General Information

Pressure Rating: PN-16

Regulation Ratio (Sustaining): 4:1

Regulation Ratio (Relief): 7:1

Kv Rate: 0.25 [l/sec]

Max Temperature: 90[°C

Ports: 1/4"

Weight: 0.75 [kg]

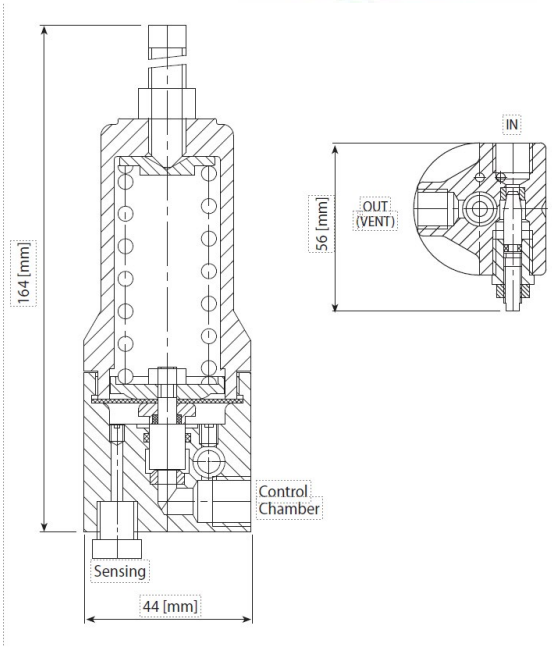

Spring Selection Pilot P-182

Setting range [Bar]	Color of spring
2-10 (standard)	Green
0,5-6	Red
2-16	Yellow

FLOAT LEVEL PILOT

P-10
2 WAY FLOAT LEVEL PILOT

Valve size: 1“- 6D“

The P-10, 2-W,is a float pilot that interconnected by a lever arm. When water level reaches its maximum level, the float rises, closing the water passage of the pilot and commands the main valve to close. When water level drops, the float opens the water passage and main valve will open.
Every change in water level is conveyed to the pilot directly through the lever arm. The pilot's water passage will open proportionally to the water level.
The P-10 is usually used to command level control valves in small and medium water reservoirs. There is no need for energy other than line pressure, it offers an economic level control solution.

Adjusting

The pilot should be installed in a location with no turbulent or wave. Verify that the pilot is installed in the reservoir at the maximum water level. Verify that the needle valve is 3/4 turn open.
Verify that the float is free to travel up and down without interference inside the reservoir.
It is recommended to wait at least one regulating cycle (closing of the valve at maximum water level) before determining that the pilot is set, to ensure water are not spilling from the reservoir.

General Information

Pressure Rating: PN-10

Range: 10 (cm)

Kv Rate: 0.45 [l/sec]

Senstivity: 0.02 [bar]

Max Temperature: 90[°C

Ports: 1/2"

Weight: 1.2 [kg]

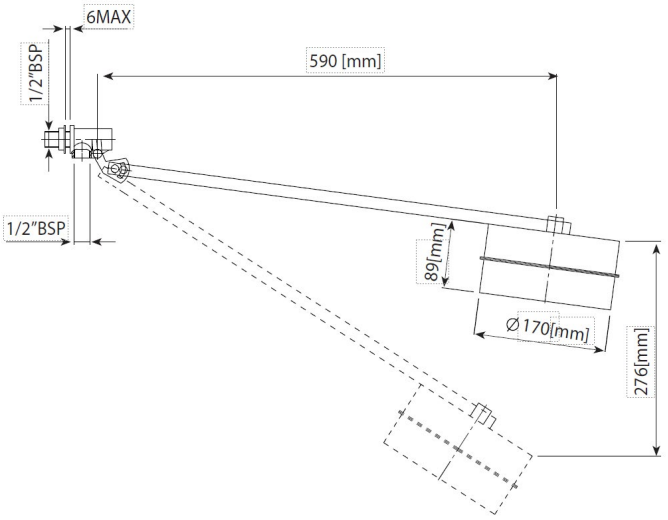

Spring Selection Pilot P-181

Setting range [Bar]	Color of spring
2-10 (standard)	Green
0.5-4	Blue
0,5-6	Red
2-16	Yellow

P-100
2 WAY DIFFERENTIAL PILOT

Valve size: 1“- 14“

he P-100, 2-W, is a Normally Open (N.O) and a differential pilot. The P-100 operates when hydraulic pressure is applied below and above the spring loaded membrane wich is connected to the pilot's seal trim. Upper and lower chambers of the pilot are connected to upstream and downstream sides of a calibrated orifice plate, used as a flow sensor.
Differential pressure across the orifice changes with flow, and conveyed to the pilot through its sensing ports. When low pressure difference is presented across the orifice plate, the valve opens. When pressure difference increases, the valve tends to close, maintaining the requested flow.

Adjusting

The Orifice plate installed should be appropriate and calculated according to the desired flow.
Verify that the needle valve is only 3/4 turn open. Check orifice plate installation.
Check flow according to the desired set point.
Pilot is delivered with adjusting screw fully loose. Possible set flow ranges from this condition to +20%. Turning adjusting screw clockwise will increase the flow and counter clockwise will decrease it. The valve takes a while to reach its new set point after changing the preset pressure. Turn adjusting screw 1 turn at a time and wait until stability. If necessary, turn again until reaching the desired set point. After reaching the desired set point, lock the adjusting screw by tightening the locking nut firmly to the cover.

General

Pressure Rating: PN-16
Regulation Ratio :34:1
Kv Rate: 0.25 [l/sec]
Range: 10 (cm)
Sensitivity: 0.02 (bar)
Max Temperature: 90[°C
Ports: 1/4”
Weight: 2.0 [kg]

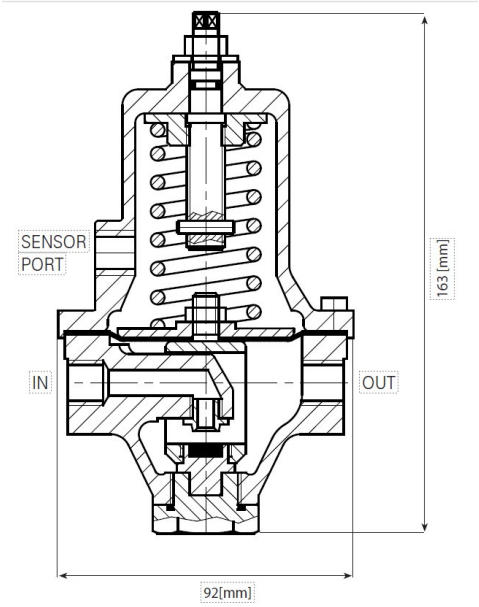

SOLENOID

RAPHAEL RANGE

HYDRAULIC RELAY 3-W PLASTIC N.C/N.O (GALIT)– FOR VALVE SIZE 1"-6D"

The **hydraulic relay** is equipped with 4 hydraulic connections and a manual operator. It converts an external hydraulic command that controls the valve. It also enables manual control of the valve.

The **hydraulic relay** is suitable for remote opening and closing of hydraulic valves and can be configured as (N.O) or (N.C).

Max Pressure: 10 bar/145 psi

Min Pressure: 5 bar/7 psi

Max temperature: 90°C/ 194 F

Weight: 0.64kg/ 1.4 lbs

Spring options for Topographic compensation:

Relay type	Unit	Yellow	Green	White	Red
N.C.	m	5-10	10-14	14-17	17-22
	psi	7-14	14-20	20-24	24-31
N.C.	m	5-10	10-15	15-20	20-25
	psi	7-14	14-21	21-28	28-35

SOLENOID 3-W 1/8" N.C/N.O VALVE

The Raphael **solenoid** valve has an electric coil responding to different currents and includes manual override.

Plastic solenoid valve bases are available with or without flange connection.

PLASTIC SOLENOID– FOR VALVE SIZE 1"-6D"

Max Pressure: 3W-N.C 6 bar / 3W-N.O 8 bar

Max temperature: 80°C

Weight: 0.1kg

Power source: 110V, 220V (AC) & 9V,12V, 24V (DC)

Plastic solenoid valve bases are available with or without flange connection.

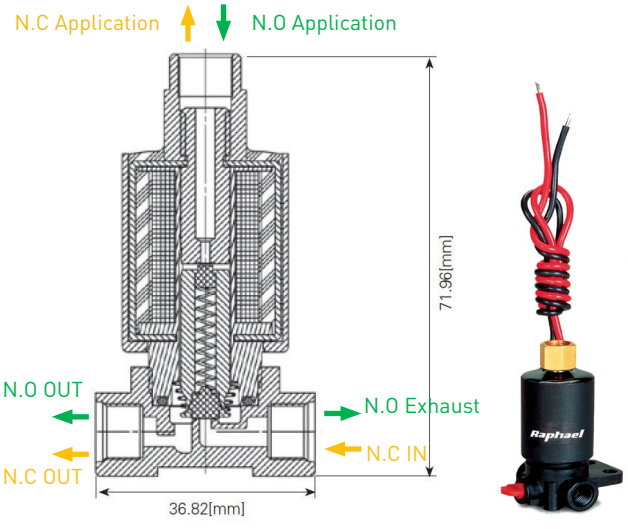

METAL SOLENOID– FOR VALVE SIZE 1"-14"

Max Pressure: 16 bar

Max temperature: 80°C

Weight: 0.267kg

Power source: 110V, 220V (AC) & 9V,12V, 24V (DC)

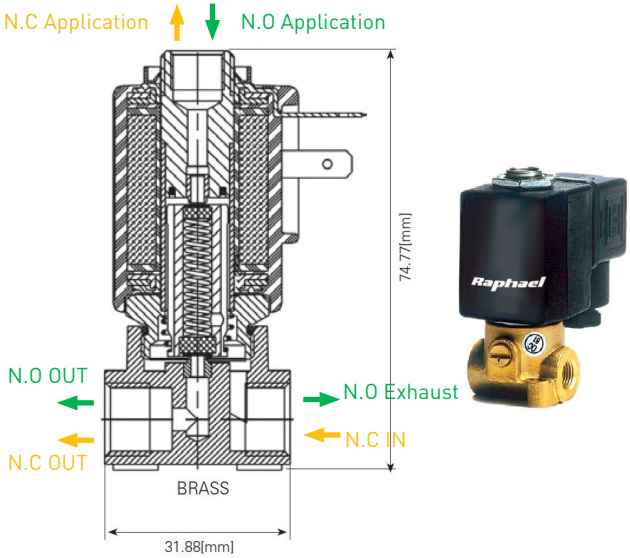

ACCESSORIES

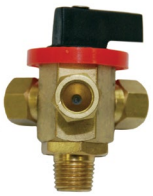

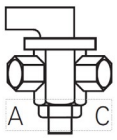

SY –3 WAY COCK VALVE

The SY 3-W cock valve is a 3 port spherical valve, mounted on the valve's control chamber and used to change water passage between control chamber and 3 other optional ports. The SY valve is equipped with 4 connections:

1. Common port connected to the valve's chamber.
2. « O »- to connect the chamber to the open air to manually open the valve.
3. « C »-to connect the chamber to the pressure supply to manually close the valve.
4. « A »-to connect the valve to the control system for an automatic control.

Applications

Use the SY 3-W cock valve with every RAF valve application where override option is necessary, enabling local opening and closing of the valve, regardless of the automatic control function command. The SY is designed for both PN-10 and PN-16 control systems.

Important Notes

When the SY 3W cock valve is used to manually open and close the main valve, the automatic function is eliminated. When the automatic function of the valve is eliminated, the valve will not function as a modulating valve, but as an On/Off valve.

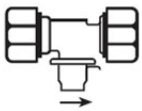

SV–SHUTTLE VALVE

The shuttle valve is a 3-W hydraulic device, used to alternatively forward hydraulic command to the valve's control chamber, from two different pressure supply devices. When the higher pressure is conveyed into the central connection from one end, the other end will be shut.
The shuttle valves are available in metal and plastic versions to fit
PN-10 and PN-16 control applications.

Applications

The shuttle valves are specifically designed for operating where 2 different hydraulic commands are present in a 3-W control system. Either remote operating and/or pilots control will alternatively operate by using the shuttle valves.

BK–2W BALL VALVE

The 2W Ball valve is a spherical valve used as isolating device in the pilot circuit. This valve is designed with a limited headloss and a maximum reliatbility to have no impact on the pilot circuit function

Applications

Use the BK 2-W ball valve as an isolation valve when the control system needs to be manipulated. The BK 2-W ball valve will eliminate water passage from the main pipe line and enable manipulation and maintenance without the need to shut down the water in the main pipeline.

Important Notes

When the BK 2-W ball valve is used to isolate the control system, the automatic function is eliminated. When the automatic function of the valve is eliminated, the valve will not function as a modulating valve, but as an On/Off valve.

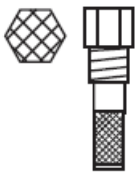

FI –FINGER FILTER

The finger filter is a self flushing screen filter installed in the water inlet of the valve's control system. It is used to prevent impurities from entering the control system and disturbing its operation by restricing, or even clogging water passages. Raphael's finger filters are designed to be maintenance free, screwed into the valves body sampling water from the main pipe. The finger filter will provide a safe water source into the control loop.

Applications

The finger filter is ideally designed for operation with RAF hydraulic control valve for irrigation applications as a main filter for the control system, for both PN-10 and PN-16 applications. Use the FI Finger filter in any control system to prevent eventual malfunction due to impurities, installing it in the water intake to the control loop.

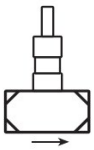

BM– NEEDLE VALVE

The needle valve is used in control system to enable the pilot control of modulating applications and provide an opening and closing regulated speed. The needle valve is used when valve operating speed and sensitivity are essential for the control system. Raphael's needle valve has a heavy duty stainless steel seat and needle construction, enabling high sensitivity and maintenance free operation.

Applications

Use the needle valve in 2-W control systems for modulation purposes. Also use the needle valve in 2-W and 3-W control systems to regulate the valve's opening and closing speed. The needle valves are specially designed for both PN-10 and PN -16 irrigation systems.

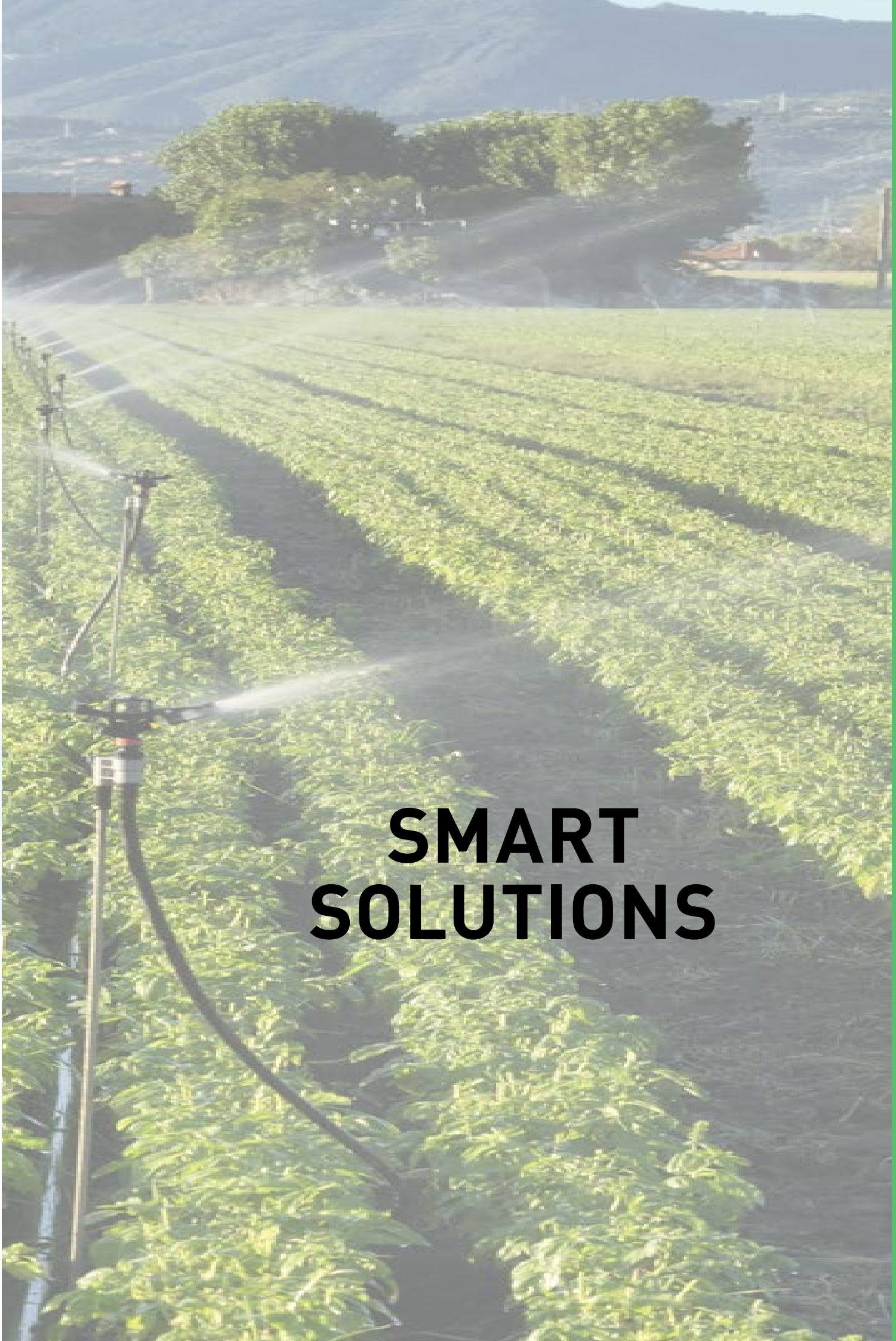

SMART SOLUTIONS

APOLLO SMART CELLULAR DATA LOGGER

Innovative and simple to install

The APOLLO is an advanced GSM data logger designed for operation in manholes and high humidity environments (IP68). Moreover, the Apollo integrates state-of-the-art technology in wireless communications and pressure transients detection, putting the APOLLO at the cutting edge of its sector.
The device has 4 digital inputs that can be used for either reading flow meters or general-purpose alarms, and 2 analogue inputs, in order to monitor a wide range of parameters such as: temperature, pressure, humidity and many more.
The 2 in-built pressure sensors are specially designed to register the pressure transients and water hammers with high accuracy.

MARKETS

- Water distribution network
- Sewage network and treatment
- Irrigation
- Water transmission
- Dams and hydro power
- Desalination
- Fire protection network
- Industrial water applications
- House connection
- Water treatment

TECHNICAL DATA

Operating temperature:
-20 °C to + 75 °C
power supply before 7.2
7.2v 14 AH lithium pack
Communication:
GSM/2G/3G/4G
NB-IoT /LTE-M1
digital inputs: 4,
analogue inputs: 2
digital outputs: 2
Number of internal pressure sensors: up to 2
Internal pressure sensor range: 0-1, 0-10, 0-20 bar
Internal pressure sensor precision: 0.4%

ADVANTAGES

PRESSURE MONITORING

2 in-built super sensitive plug&play pressure sensors

VERSATILE

Suitable for wide range of uses: municipal water distribution, agriculture and advanced monitoring

REMOTE

Bi-directional remote control and programming abilities

KEY FEATURES

ADVANCE WEB BASED INTERFACE

SUPPORTING MODBUS COMMUNICATION PROTOCOL

ZEUSweb

ZEUSmobile

TECHNICAL DATA

Antenna type: external

Life time: 10 years (under standard configurations)

local communication: Bluetooth LE (4.0)

APPROVALS

CE

IP 68

MAIN APPLICATIONS

- **Potable water network –** for water meter monitoring, flow meter monitoring
- **Waste water network –** sewage level monitoring for electromagnetic monitoring
- **Irrigation –** for monitoring, for remote control (open/close applications), tank level indications
- **Water Utilities –** reduce NRW, bulk meter monitoring, pressure indications,
- **Water works –** leak group management, monitoring

MAIN FEATURES

- Ultra-low power consumption (up to 10 years lifetime with one battery pack)
- Quick installation (include battery replacement)
- Friendly and intuitive WEB interface for data monitoring
- Light weight : 870 g
- Modbus compatible
- 4 digital inputs for water meters and flow meters.
- 2 analogue inputs (self powered)
- 2 digital output for remote monitoring
- 2 in-built pressure sensors
- local communication: Bluetooth LE
- IP68 - tested under 2 meters of water for 100 days
- Water hammer detection algorithm - unique system to detect live water hammer up to 128 records per second
- Third party integration abilities with other software
- Remote commands OPEN\CLOSE latch valves
- Extended internal memory (up to 90,000 values)
- Available also with external power connector

COMPLEMENTARY ULTRAF FEATURE:

- **#A0:** Flow meter only for water meters (4 digital+2 analogue)
- **#A1:** Basic + 2 pressure sensor 0-20 bar
- **#A2:** Basic + pressure sensor + external power supply connector
- **#A3:** Flow meters only (4 digita+2 analogue) + LATCH DRIVER
- **#A4:** Basic + 2 pressure sensor 0-20 bar + LATCH DRIVER
- **#A5:** Basic + pressure sensor + external power supply connector + LATCH DRIVER

*Other models will be provided upon request

ULTRAF SMART ULTRASONIC HYDROMETER

The ULTRAF combines the highest level of pressure and flow control valve with an accurate and reliable Ultrasonic water meter in one compact design. ULTRAF PRO combines state of the art technologies from different fields such as advanced hydraulics, accurate sensing and modern communications.
The ULTRAF is a unique product, based on the "RAF" control valve merged with the newest technology of battery operated, ultrasonic water meter. It enables flow monitoring and pressure regulation in a small footprint saving significant space in manholes and valve boxes.
The ULTRAF product flexibility allow it to be relevant to different market and applications such: agriculture, turf & municipal market, for pressure control and flow monitoring, municipal market for leakage control and other.

MARKETS

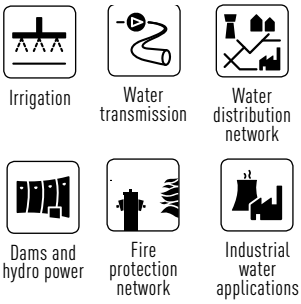

TECHNICAL DATA

Fluid: drinking water, or filterd water

Nominal Diameter (DN): 50 mm-200 mm (2" to 8")

Nominal Pressure (PN):

Nominal: 10 – 16

Working: 16 bar

Medium Temperature: up to 70 °C

Body material: Ductile Iron with rilsan coating

Pipe connection: flanges

Pilot circuit protecte by a self-flushing finger filter, installed in the water inlet of the valve: maintenance free.

CHARACTERISTICS

- **Flow measuring unit and hydraulic valve combined**
- **No moving parts,** high accuracy throughout the full product life time
- **Very accurate Ultrasonic measuring unit** in wider flow rates than conventional meters. Accuracy according to ISO 04064 (2005) R125 or higher on request
- **No straight pipe upstream & downstream needed**
- **Irrigation controller card,** no need to be dependent on external device
- **Battery** powered, 10 years no maintenance measuring unit. Battery in a separate compartment with tamper seal protection. Field replaceable by authorize dealer
- **Separate volume pulse output,** protecting main processor from accidental high voltage damage. 2 x 9 VDC batteries for operation in a separate compartment, field replaceable by owner
- **Extension cards** for 4-20 mA continuous volume output; independent pressure management, flow based, pressure reducing valve or volumetric irrigation controller
- **Blue Tooth® communication** with RAPHAEL controller smartphone App. for measuring units preference selection and controller settings
- All metal, water resistant unit according to IP68
- Available in sizes 50 mm to 200 mm

AVAILABLE CONFIGURATION

- **Basic**
- **Pulse output**
- **Analogue output**
- **Pressure management**
- **Irrigation controlling**

PRODUCT MAIN ADVANTAGES:

- All in one product (integrated water meter and control valve)
- IP 68 (perfect for submerged conditions)
- Ideal for modern Irrigation with the irrigation control card
- Vertical and horizontal installation
- Perfect for increased revenues and reduce leak detections
- Reduce NRW % (non-revenue water) as DMA meter
- Rugged Digital display
- No moving parts provide high accuracy for long time
- Low maintenance required
- Long life (up to 10 years)
- Competitive price compared the current market solutions.

Accuracy

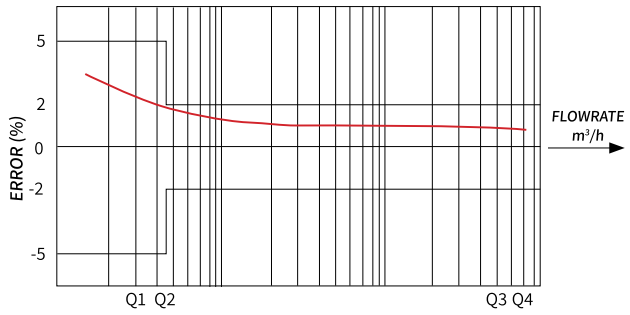

Head Loss

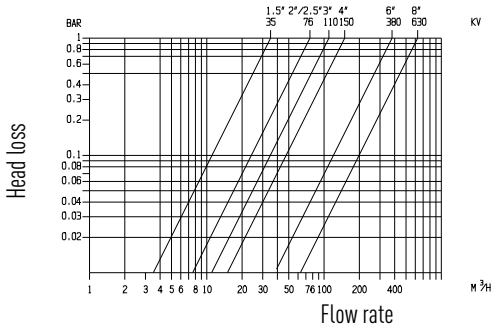

Product Performance

DN {mm}	40	50	80	100	150	200
DN {inch}	1½	2	3	4	6	8
Q1	0.2	0.32	0.504	0.8	2	3.2
Q2	0.51	0.51	0.806	1.28	3.2	5.12
Q3	25	40	63	100	250	400
Q4	31.25	50	78.75	125	312.5	500
R = Q3/Q1	125	125	125	125	125	125

DISPLAY

The display provides ongoing information to the operator in the field, at all times, by two main ways: digital display monitor and output cards. Cards can be added at any time.

- Information on the digital display:
- Water flow at any given moment.
- Accumulated water volume.
- Battery status.
- Flow in the pipeline (if pipe is full).
- Flow direction.
- Alerts.
- Connection status of electrical outputs from Ultraf Pro to external systems, and more.

- Information about extension cards:
- Two digital ports, one to register flow and one to activate a latching solenoid valve.
- A 4-20mA analog continues output for flow-rate monitoring.
- Modbus output.

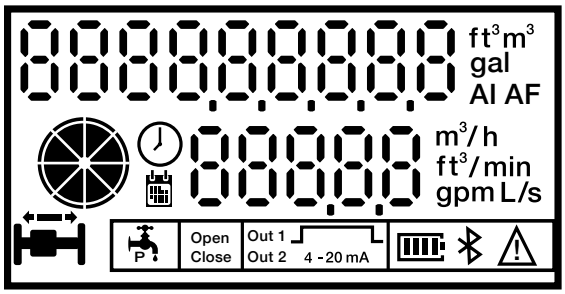

Accumulated amount of water (in varying measurement units)

Flow rate (m3/h, ft3/min, gpmL/s)

Water status in pipe (full/partial/empty)

Flow direction

Latch solenoid status

Bluetooth connection

External output connection

Pulse output

Irrigation in progress

Active and supported irrigation

Battery status

General alert

RAF SERIES

Ordering Guide

Control Valve

Range		Main Valve		
		Size DN	End connection	Option
RAF	—	02	0	-

#	Size DN	
	mm	inch
15	40	1,5
02	50	2
03	80	3
04	100	4
06	150	6
08	200	8

#	Function description
G	Grooved*
NP	Threaded NPT**
0	Threaded BSP**
1	BSTD/ASTD Flange***
2	ND16/PN16/Iso Flange***
3	ASA150 Flange-Class 140***

*only valid for DN 25 to 200
**only valid for DN 25 to 100
*** only valid for DN 50 to 350

	Function description
01	Hydraulic operated
31	Electric operated
63	Pressure reduction
6331	Pressure reduction/Electric operated
83	Pressure sustaining
683	Pressure sustaining and reduction
70	Flow rate 2 ways
73	Flow rate 3 ways
673	Flow rate 3 ways/ pressure reduction

#	Main Valve Option
-	No additional Option
S	main valve in Stainless steel
I	Visual indicator
E	Electric Limit Switch
F	Fixing element in Stainless steel
D	Diaphragm in EPDM

+

additional features

Pilot circuit		
Function	Material/max P	Option
63	P	-

—

Electronic and communication feature
-

#	Pilot material and maximal pressure associated	
	Pilot material	Maximal pressure
P	Plastic pilot***	10 bar***
B	Metal pilot	16 bar

*** only valid for DN 40 to 100

#	Pilot circuit Option
-	No additional Option
OT	Hydraulic Control-Shuttle Valve T"Borrer"
OG	Hydraulic Control-Galit Relay
OM	Accelerator Relay
31	Complementary solenoid
T	Stainless Steel tubing
L	Large Control Filter
NC	NC-Normaly closed solenoid
NO	Normaly open solenoid
110V	Solenoid power supply 110V AC
120V	Solenoid power supply 120V AC
9V	Solenoid power supply 9V DC
12V	Solenoid power supply 12V DC

#	Additional communication device Apollo
-	No additional Feature
A0	Flow meters only (4 digita+2 analogue)
A1	Basic + 2 pressure sensor 0-20 bar
A2	Basic + pressure sensor + external power supply connector
A3	Flow meters only (4 digita+2 analogue) + LATCH DRIVER
A4	Basic + 2 pressure sensor 0-20 bar+ LATCH DRIVER
A5	Basic + pressure sensor + external power supply connector +LATCH DRIVER

Raphael Valves Industries (1975) Ltd, founded in 1949, is the first Israeli manufacturer of water control valves. RAPHAEL´s research department constantly strives to introduce new and innovative products and solutions for water control systems including water works, fire-protection and irrigation systems.

RAPHAEL is part of the TALIS group - an international concern in the field of water supply systems, which has about 1,400 workers at 7 production sites in different countries

RAPHAEL Valves Industries (1975) Ltd.
North Industrial Zone
Or Akiva, 30600
POBox 555, Israel
PHONE +972 4 6263555
FAX +972 4 6263558
E-MAIL export@raphael.co.il
WEBSITE www.raphael-valves.com

CAT_RAF_IRRIGATION_01.23_EN

Note: Information and specifications may be changed without notification at any time.
Copyright: No copying without express written permission of TALIS.
TALIS is a Registered Trademark.

TALIS